2013

Modernized E~File Specifications for Partnership and S-Corporation Information and Composite Tax Returns (Form PR-1 and CLT-4S)

October 15, 2013
Version 1.1

Montana Department of
REVENUE

Table of Contents

Table of Contents....2
INTRODUCTION....3
WHAT HAS CHANGED FOR TY2013....3
Program Overview....7
Contact Information....7
Online Resources....8
MeF Participation and Acceptance....8
ATS Testing....8
Forms and Attachments....10
Submission Manifest....11
Return Header State....11
Direct Deposit and Direct Debit....11
Software Vendor Information....11
Software Vendor Expectations....14
Montana Form PR-1....15
Montana Form PR-1 Schedule I....19
Montana Form PR-1 Schedule II....22
Montana Form PR-1 Schedule III....23
Montana Form PR-1 Schedule IV....24
Montana Form PR-1 Schedule VI....25
Montana Form CLT-4S....26
Montana Form CLT-4S Schedule I....30
Montana Form CLT-4S Schedule II....33
Montana Form CLT-4S Schedule III....34
Montana Form CLT-4S Schedule IV....35
Montana Form CLT-4S Schedule VI....36
Alternative Energy Production Credit (AEPC)....37
Alternative Fuel Credit (AFCR)....39
Biodiesel Blending and Storage Credit (BBSC)....39
College Contribution Credit (CC)....40
Dependent Care Assistance Credits (DCAC)....40
Film Production Credit (FPC)....41
Film Production Credit, Schedule I – Employment Production Credit....42
Film Production Credit, Schedule II – Qualified Expenditures Credit....42
Health Insurance for Uninsured Montanans Credit (Form HI)....43
Oilseed Crushing & Biodiesel/Biolubricant Production Facilities Credit (Form OSC)....44
Recycle Credit/Deduction (Form RCYL)....44
Temporary Emergency Lodging Credit (Form TELC)....46
Application and Affidavit for Certification and Approval of Mineral and Coal Exploration Incentive Credits (Form MINE-CERT)....46
Montana Schedule K-1 (Unbounded)....48

INTRODUCTION

The material in this publication will provide software developers the necessary information for capturing and formatting Montana tax data required to submit complete Montana Partnership and S-Corporation Tax returns.

This publication does NOT replace the requirements, procedures, etc., issued by the IRS. All IRS requirements must be adhered to in the development of the Montana return.

WHAT HAS CHANGED FOR TY2013

Montana Form PR-1

Ref #10	Software company name (details-page 11)	(New)	Page 15
Ref #20	Software product name (details- page 11)	(New)	Page 15
Ref #30	NACTP ID (details-page 11)	(New)	Page 15
Ref #120-170	**Element Type and rule changes**	**(Changed)**	**Page 15**
Ref #190	Rule changed to non-negative	(Changed)	Page 15
Ref #200	Rule changed to non-negative	(Changed)	Page 15
Ref #210	Rule changed to non-negative	(Changed)	Page 15
Ref #210	Rule changed to non-negative	(Changed)	Page 15
Ref #220	Rule changed to non-negative	(Changed)	Page 15
Ref #670	Deleted for TY2013	(Deleted)	Page 16
Ref #680	Deleted for TY2013	(Deleted)	Page 17
Ref #720	Deleted for TY2013	(Deleted)	Page 17
Ref #730	Deleted for TY2013	(Deleted)	Page 17
Ref #740	Deleted for TY2013	(Deleted)	Page 17
Ref #750	Deleted for TY2013	(Deleted)	Page 17
Ref #950	Date signed	(New)	Page 17
Ref #960	Printed Name of General Partner	(New)	Page 17
Ref #970	Title of General Partner	(New)	Page 17
Ref #980	Telephone number of Gen Partner	(New)	Page 17
Ref #990	Rule changed	(Changed)	Page 18
Ref #1000	Rule changed	(Changed)	Page 18
Ref #1010	Rule changed	(Changed)	Page 18

Numerous line descriptions have changed
Numerous updates to reference numbers
Numerous updates to line numbers

Montana Form PR-1 Schedule I Apportionment Factors for Multistate Partnerships

Ref #720	3j	Element type to USAmountNNType	(Changed)	Page 20
Ref #730	3j	Element type to USAmountNNType	(Changed)	Page 20

Montana Form PR-1 Schedule II Montana Partnership Tax Credits

Ref #160	6	Additional rules	(New)	Page 22
Ref #210		Deleted	(Deleted)	Page 22

Numerous updates to reference numbers
Numerous updates to line numbers

Montana Form PR-1 Schedule III Montana Partnership Information

Ref #280	**1E**	**ElementType to Boolean**	**(Changed)**	**Page 23**

Montana Form PR-1 Schedule IV Montana Partnership Composite Tax Schedule

Ref #100		Element type to IntegerNNType	(Changed)	Page 24

Montana Form PR-1 Schedule VI Reporting of Special Transactions

Ref #100-140		**ElementType to Boolean**	**(Changed)**	**Page 25**

Montana Form CLT-4S

Ref #10		Software company name (details-page 11)	(New)	Page 26
Ref #20		Software product name (details- page 11)	(New)	Page 26
Ref #30		NACTP ID (details-page 11)	(New)	Page 26
Ref #120		Element type to BooleanType	(Changed)	Page 26
Ref #130		Element type to BooleanType	(Changed)	Page 26
Ref #140		Element type to BooleanType	(Changed)	Page 26
Ref #150		Element type to BooleanType	(Changed)	Page 26
Ref #160		Delete		Page 26
Ref #180		Rule changed to non-negative	(Changed)	Page 26
Ref #190		Rule changed to non-negative	(Changed)	Page 26
Ref #200		Rule changed to non-negative	(Changed)	Page 26
Ref #210		Rule changed to non-negative	(Changed)	Page 26
Ref #650		Deleted for TY2013		Page 27
Ref #660		Deleted for TY2013		Page 27
Ref #700		Deleted forTY2013		Page 28
Ref #710		Deleted for TY2013		Page 28
Ref #720		Deleted for TY2013		Page 28
Ref #730		Deleted for TY2013		Page 28
Ref #930		Date signed	(New)	Page 28
Ref #940		Printed Name of Officer	(New)	Page 28
Ref #950		Title of Officer	(New)	Page 28
Ref #960		Telephone number of Officer	(New)	Page 28
Ref #970		Element type to BooleanType	(Changed)	Page 29
Ref #980		Element type to BooleanType	(Changed)	Page 29
Ref #990		Element type to BooleanType	(Changed)	Page 29

Numerous line descriptions have changed
Numerous updates to reference numbers
Numerous updates to line numbers

Montana Form CLT-4S Schedule I Apportionment Factors for Multistate S Corporations

Ref #720	3j	Element type to USAmountNNType	(Changed)	Page 31
Ref #730	3j	Element type to USAmountNNType	(Changed)	Page 32

Montana Form CLT-4S Schedule II Montana S-Corporation Tax Credits

Ref #160	6	Additional rules (see Page ##)	(New)	Page 33
Ref #210		Deleted for TY2013		Page 33
Ref #220	10	Mineral & Coal Exploration credit	(Changed)	Page 33

Numerous updates to line numbers

Montana Form CLT-4S Schedule III Montana S-Corporation Information

Ref #280	**1E**	**ElementType to Boolean**	**(Changed)**	**Page 34**

Montana Form CLT-4S Schedule IV Montana S-Corporation Composite Tax Schedule

No Changes for TY2013

Montana Form CLT-4S Schedule VI Reporting of Special Transactions

Ref #100-140	**Element type to BooleanType**	**(Changed)**	**Page 36**

Montana Form AEPC (Alternative Energy Production Credit)

Ref #260	Element type to EINType	(Changed)	Page 37

Montana Form AFCR (Alternative Fuel Credit)

Ref #150	**Element type to RatioType**	**(Changed)**	**Page 39**

Montana Form BBSC (Biodiesel Blending and Storage Credit)

No Changes for TY2013

Montana Form CC (College Contribution Credit)

Ref #150	**1E**	**ElementType to RatioType**	**(Changed)**	**Page 40**
Ref #160		Unbounded	(Changed)	Page 40

Montana Form DCAC (Dependent Care Assistance Credit)

Ref #150	Element type to RatioType	(New)	Page 40
Ref #150	Element type to USAmountNNType	(Changed)	Page 40

Montana Form FPC (Film Production Credit)

Ref #210	Qualified Certification Name	(New)	Page 42

Montana Form FPC Schedule I (Film Production Credit)

No Changes for TY2013

Montana Form FPC Schedule II (Film Production Credit)

No Changes for TY2013

Montana Form HI (Health Insurance for Uninsured Montanans Credit)

Ref #150	**Element type to RatioType**	**(Changed)**	**Page 43**

Montana Form OSC (Oilseed Crushing and Biodiesel/Biolubricant Production Credit)

No Changes for TY2013

Montana Form RCYL (Recycling Credit)

Ref #150		**Element type to RatioType**	**(Changed)**	**Page 45**

Montana Form TELC (Temporary Emergency Lodging Credit)

Ref #100		Element type to String64Type	(Changed)	Page 46
Ref #190	1C	Element type to USAmountPosType	(Changed)	Page 46

Montana Form MINE-CERT(Mineral and Coal Exploration Incentive Credit)

Ref #490		Summary of work completed during year changed to unbounded		Page 48

Montana Form Schedule K1 (Partner/Shareholder Share of Income)

Ref #820	2	Additional rules (see Page 50)	(New)	Page 50

Program Overview

Partnering with the IRS, the Montana Department of Revenue began accepting electronic Partnership Tax returns starting in December 2008. Returns will be prepared and submitted using the Modernized E~File (MeF) system. Montana will be accepting both Fed/State and State-Only returns from authorized E~File providers.

All software developers are required to participate in acceptance testing prior to sending production returns. Prior to testing all software developers should complete the Montana MeF Vendor Registration. This registration form provides the department with primary contact information and software limitations for vendors wanting to participate in the Montana MeF PR-1 and CLT-4S programs.

Once a software vendor has passed Montana testing, production returns will be accepted for that vendor. Production returns will have acknowledgements created and transmitted back to the vendor through the IRS.

Contact Information

There are many different people at the department working on the Modernized E~File program. Therefore, we recommend that all questions be submitted to the primary contact listed below. Also, questions in the form of an e-mail are preferred because they can be forwarded to the person best suited to answer the question.

Contact Information:

Rebecca Smith
Montana Department of Revenue
Phone (406) 444-5873
Fax (406) 444-1505
DORMef@mt.gov

Address:

Montana Department of Revenue
Attn: Rebecca Smith
PO Box 5805
Helena, MT 59604

Office Hours:

8:00am to 4:30pm Monday through Friday

Online Resources

State of Montana	http://mt.gov/
MT Department of Revenue	http://mt.gov/revenue/
Internal Revenue Service	http://www.irs.gov/
Federation of Tax Administrators	http://www.taxadmin.org/
TIGERS	http://www.statemef.com/

MeF Participation and Acceptance

The Montana Department of Revenue will partner with all IRS approved software vendors in the development of a Modernized E~File program for Montana Partnership and S Corporation Tax. Prior to development, software vendors should complete the Modernized E~File (MeF) Software Vendor registration form. This registration form is usually sent to the NACTP for distribution and can also be found on our website.

Montana will make available schemas for our base forms (PR-1 and CLT-4S) and a large number of supporting schedules and credit forms. At this time we do not have any requirements or mandates on what software vendors must support. However, we do encourage software vendors to support as many forms as possible to create a tax return that is as complete and accurate as possible.

ATS Testing

Montana requires all software developers and transmitters to test with the MT DOR. Montana will start ATS testing of current year returns when the IRS starts this process. Prior year returns could also be tested if requested by a software vendor.

The Montana Department of Revenue ATS package will may include up to 12 test returns. These tests will be criteria based. These scenarios will include a list of what lines are to be tested. The values sent will be left up to the software vendor. We strongly encourage all software vendors to test as many fields as possible. Software developers must send all tests that are supported at least once to successfully pass ATS. Please include all tests returns each time tests are submitted.

The ATS test cases are criteria based. In order to facilitate our testing process a PDF copy of each test case will need to be submitted at the same time the returns are submitted to the IRS. We will use this PDF copy to compare the MeF data received to the actual return submitted. Any differences will be identified in the compares document created after the tests have been reviewed. If the ATS test cases need to be corrected, please make the corrections indicated in the compares document and resubmit all the tests cases.

Once ATS test cases have been submitted to the IRS please forward the state submission ID's to DORMeF@mt.gov. Doing so will help us identify who submitted the test cases and allow for tracking of the returns through the testing process. Once returns have been successfully received from the IRS they will be added to the queue for review. In most cases ATS test cases will be reviewed in the order they are received. After the tests have been reviewed a compares document will be sent by email to the software vendor.

A preliminary test packet will be made available to software vendors **Monday October 14th, 2013**. The IRS will make available Fed/State testing **November 4th, 2013**. At this time the Montana Department of Revenue should be able to accept ATS test returns.

Tax preparers are not required to test with the Montana Department of Revenue.

Forms and Attachments

The Montana Department of Revenue will offer E~Filing of the following forms, schedules and credits:

• Form PR-1	Montana Partnership Information and Composite Tax return
• Form PR-1 Schedule I	Apportionment Factors for Multi-state Partnership
• Form PR-1 Schedule II	Montana Partnership Tax Credits
• Form PR-1 Schedule III	Montana Partnership Information
• Form PR-1 Schedule IV	Montana Partnership Composite Income Tax Schedule
• Form PR-1 Schedule VI	Reporting of Special Transactions
• Form CLT-4S	Montana S Corporation Information and Composite Tax return
• Form CLT-4S Schedule I	Apportionment Factors for Multi-State S Corporations
• Form CLT-4S Schedule II	Montana S Corporation Tax Credits
• Form CLT-4S Schedule III	Montana S Corporation Information
• Form CLT-4S Schedule IV	Montana S Corporation Composite Income Tax Schedule
• Form CLT-4S Schedule VI	Reporting of Special Transactions
• Form AEPC	Alternative Energy Production Credit
• Form AFCR	Alternative Fuel Credit
• Form BBSC	Biodiesel Blending and Storage Credit
• Form CC	College Contribution Credit
• Form DCAC	Dependent Care Assistance Credit
• Form FPC	Film Production Credit
• Form FPC-PP Schedule I	Employment Production Credit
• Form FPC-PP Schedule II	Qualified Expenditures
• Form HI	Health Insurance for Uninsured Montanans Credit
• Form K-1	Partner's Share of Income, Loss, Deductions, Credits, etc.
• Form OSC	Oil Seed Crushing facilities Credit
• Form RCYL	Recycling Credit
• Form RSCH	Increase R & D Activities Credit
• Form TELC	Temporary Emergency Lodging Credit
• Form Mine-Cert	Certification of Mineral & Coal Credit

The Montana Department of Revenue will accept attachments of the following items:

- Interest and Dividends not Taxable under Internal Revenue Code
- Taxes Based on Income or Profit
- Other Additions
- Interest on US Government Obligations
- Other Deductions
- Income/Loss Allocated to Montana
- Payments made with original return
- Previously Issued Refunds
- Contractors Gross Receipts Tax Credit
- Infrastructure Users Fee Credit
- Insure Montana Small Business Health Insurance Credit

Submission Manifest

The following values should be used in the state submission manifest.

Element Name	Form PR-1	Form CLT-4S
GovernmentCode	MTST	MTST
StateSubmissionType	PR-1	CLT-4S
SubmissionCatagory	PART	CORP

Return Header State

The following items from the ReturnHeaderState are required for Montana returns.

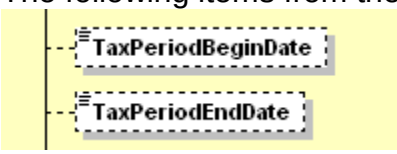

Direct Deposit and Direct Debit

The Montana Department of Revenue does support both Direct Deposit of a refund as well as Direct Debit of a tax due. At this time we do not allow for a refund to be split and deposited into separate bank accounts.

Software Vendor Information

New to TY2013 is an element called SoftwareVendorInfomation (shown below). We have added this element to make it easier for department staff to identify which software vendor and/or product was used to create and submit an MeF return. This new element is the first element in the state return. This information is only in the MeF information and is not on the paper form itself. This is a required element where two of the three child elements are required.

For the required element SoftwareVendorName we would expect to see the name of the software firm. The SoftwareProductName element is required and should be populated with the name of the product being used to complete the return. The NACTPID element is optional, however it is strongly suggested this element be populated with the ID number assigned by the NACTP.

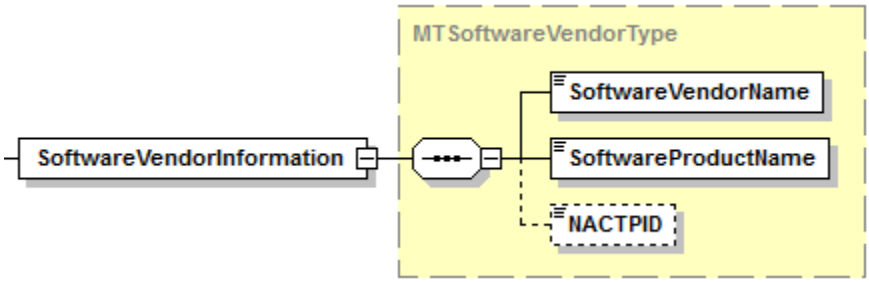

New Element for PR-1

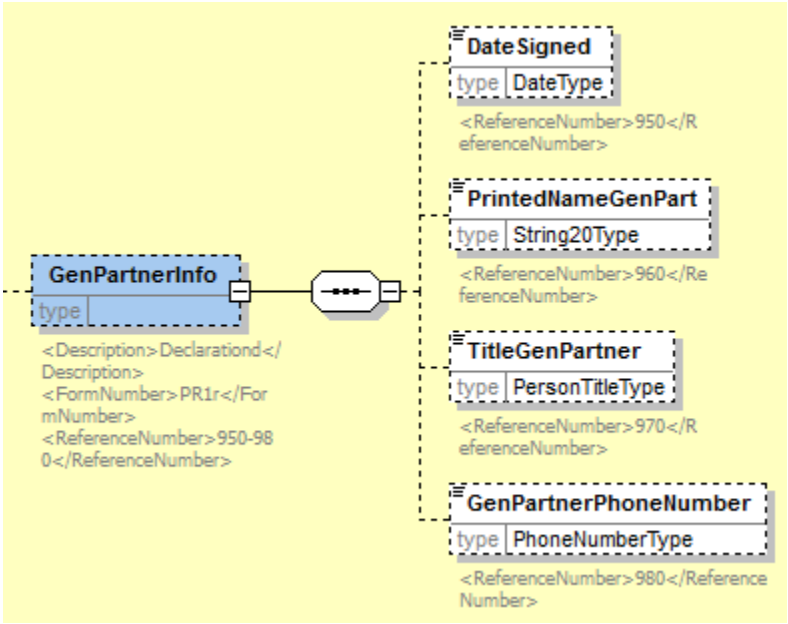

New Element for S Corporation

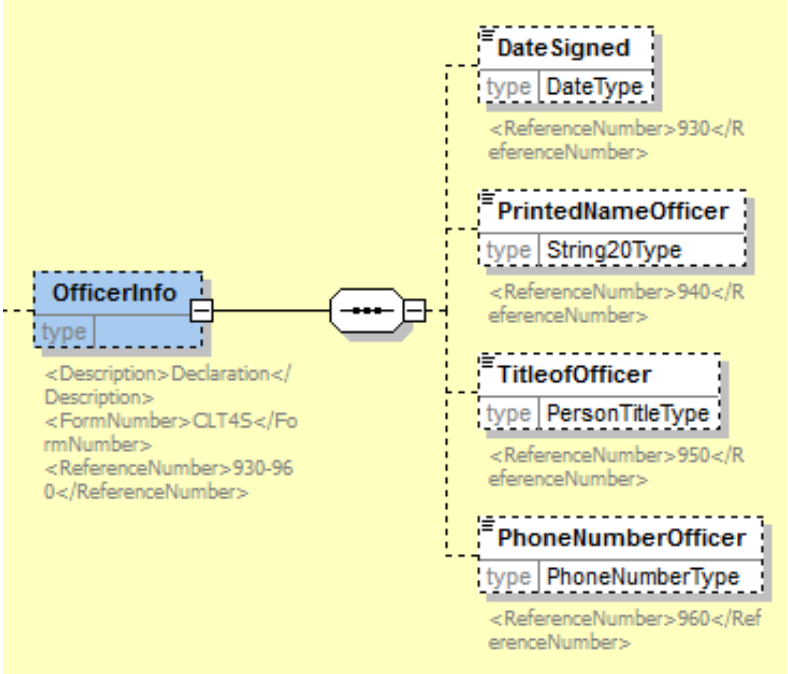

Forms	PR-1 E~File	CLT-4S E~File	PDF	Required PDF File Name
Main Form (pages 1 &2)	X	X		
Schedule I	X	X		
Schedule II	X	X		
Schedule III	X	X		
Schedule IV	X	X		
Schedule VI	X	X		
Schedule K-1	X	X		
FORM AEPC	X	X	X	MTAEPC**1301.pdf**
FORM AFCR	X	X	X	MTAFCR**1301.pdf**
FORM BBSC	X	X	X	MTBBSC**1301.pdf**
FORM CC	X	X	X	MTCC**1301.pdf**
FORM DCAC	X	X	X	MTDCAC**1301.pdf**
FORM FPC	X	X	X	MTFPC**1301.pdf**
FORM FPC-AF			X	MTFPCAF**1301.pdf**
FORM FPC-PP Sch. I	X	X	X	MTFPCPPI**1301.pdf**
FORM FPC-PP Sch. II	X	X	X	MTFPCPPII**1301.pdf**
FORM HI	X	X	X	MTHI**1301.pdf**
FORM OSC	X	X	X	MTOSC**1301.pdf**
FORM QEC	X	X	X	MTQEC**1301.pdf**
FORM RCYL	X	X	X	MTRCYL**1301.pdf**
FORM RSCH	X	X	X	MTRSCH**1301.pdf**
FORM PT-AGR			X	MTPTAGR**1301.pdf**
FORM PT-STM			X	MTPTSTM**1301.pdf**
FORM PT-WH			X	MTPTWH**1301.pdf**
FORM MINE-CERT	X	X	X	MTMINECERT**1301.pdf**
FORM TELC	X	X	X	MTTELC**1301.pdf**
FORM K-COMB	X	X	X	MTKCOMB**1301.pdf**
Binary Attachments	**PR-1 Line #**	**CLT-4S Line #**	**PDF**	**Required PDF File Name**
Interest & Dividends not taxable			X	MTINTNOTTAX**1301.pdf**
Taxes based on income or profit			X	MTTAXINCPRO**1301.pdf**
Other Additions			X	MTOTHADD**1301.pdf**
Interest on Govt Obligations			X	MTINTGOVT**1301.pdf**
Other Deductions			X	MTOTHDED**1301.pdf**
Income/Loss Allocated to Montana			X	MTINCOME**1301.pdf**
Payments made with original return			X	MTPMTORIRTN**1301.pdf**
Previously Issued Refunds			X	MTPREREF**1301.pdf**
Contractor Gross Receipts			X	MTCGRDET**1301.pdf**
Infrastructure Users Fee			X	MTINFFEE**1301.pdf**
Insure Montana			X	MTINSMT**1301.pdf**

NOTE: PDF file name includes '**13**' and '01'. The '**13**' is the tax year and the '01' represents a range of 01-99 different occurrences of a form with a submission.

Software Vendor Expectations

The Montana Department of Revenue is pleased to work with any software companies interested in developing E~Filing of Montana returns. Our department has expectations for the developers supporting the various Montana MeF returns. These expectations are listed below.

- ☑ **Complete the vendor registration form for all the tax types that will be supported.**
- ☑ **Comply with all the federal and state requirements per the specification documents.**
- ☑ **Provide complete and accurate tax returns for the taxpayers of Montana.**
- ☑ **Participate and successfully complete ATS testing with the department of revenue.**
- ☑ **Submit well-formed XML information to the department during both ATS testing and production.**
- ☑ **Provide and perform schema validation on all returns submitted to the department during both ATS testing and production.**
- ☑ **Be responsive to department requests for correction of software issues during both ATS testing and production.**
- ☑ **Provide timely software updates to the preparer community.**

Only submit production returns after your software has successfully completed ATS testing and approval has been received by the Montana Department of Revenue.

Ref #	Line #	Description	Type	Optional/Required	Rule

Montana Form PR-1

Partnership and Composite Tax Return (Page 1 & 2)

Tax Return Information

10		Software vendor name	StringType	Required	Software firm name
20		Software product name	StringType	Required	Software product name
30		NACTP ID	StringType	Optional	NACTP assigned software vendor identification
100		*Tax period begin*	*Date Type*	*Optional*	*Format YYYY-MM-DD*
110		*Tax period end*	*Date Type*	*Optional*	*Format YYYY-MM-DD*
120		Initial return checkbox	**BooleanType**	Optional	**Either TRUE or FALSE is required**
130		Final return checkbox	**BooleanType**	Optional	**Either TRUE or FALSE is required**
140		Amended return checkbox	**BooleanType**	Optional	**Either TRUE or FALSE is required**
150		Refund return checkbox	**BooleanType**	Optional	**Either TRUE or FALSE is required**
160		PTP checkbox	**BooleanType**	Optional	**Either TRUE or FALSE is required**
170		Technical termination checkbox	**BooleanType**	Optional	**Either TRUE or FALSE is required**
180		*FEIN*	*EINType*	*Optional*	*Numeric*
190		Number of K1's included	IntegerType	Optional	Numeric non-negative
200		Number of resident partners	IntegerType	Optional	Numeric non-negative
210		Number of nonresident partners	IntegerType	Optional	Numeric non-negative
220		Number for other types of partners	IntegerType	Optional	Numeric non-negative
230		Date registered in Montana	DateType	Optional	Format YYYY-MM-DD
240		MT Secretary of State ID number	StringType	Optional	Format as one Alpha followed by 6 numeric
250		State formed in	String20Type	Optional	Can contain up to 20 characters
260		State formed on date	DateType	Optional	Format YYYY-MM-DD
270		Federal Business Code/NAICS	StringType	Optional	Must be six characters
Partners' Distributive Share of Income Items (Form 1065, Schedule K)					
280	1	Ordinary business income/loss	USAmountType	Optional	Can contain up to 15 digits
290	2	Net rental real estate income/loss	USAmountType	Optional	Can contain up to 15 digits
300	3a	Other gross rental income/loss	USAmountType	Optional	Can contain up to 15 digits
310	3b	Expenses from other rental activities	USAmountType	Optional	Can contain up to 15 digits
320	3c	Other net rental income/loss	USAmountType	Optional	Can contain up to 15 digits
330	4	Guaranteed payments	USAmountType	Optional	Can contain up to 15 digits
340	5	Interest income	USAmountType	Optional	Can contain up to 15 digits
350	6	Ordinary dividends	USAmountType	Optional	Can contain up to 15 digits
360	7	Royalties	USAmountType	Optional	Can contain up to 15 digits

Ref #	Line #	Description	Type	Optional/Required	Rule
370	8	Net short term capital gain/loss	USAmountType	Optional	Can contain up to 15 digits
380	9	Net long term capital gain/loss	USAmountType	Optional	Can contain up to 15 digits
390	10	Net section 1231 gain/loss	USAmountType	Optional	Can contain up to 15 digits
400	11	Other income/loss	USAmountType	Optional	Can contain up to 15 digits
410	12	Total federal income/loss	USAmountType	Optional	Can contain up to 15 digits
Partners' Distributive Share of Deduction Items (Form 1065, Schedule K)					
420	13a	Section 179 deduction	USAmountType	Optional	Can contain up to 15 digits
430	13b	Contributions	USAmountType	Optional	Can contain up to 15 digits
440	13c	Investment interest expense	USAmountType	Optional	Can contain up to 15 digits
450	13d	Section 59(e)(2) expenditures	USAmountType	Optional	Can contain up to 15 digits
460	13e	Other deductions	USAmountType	Optional	Can contain up to 15 digits
470	14	Total federal deductions	USAmountType	Optional	Can contain up to 15 digits
480	15	Federal income from all sources	USAmountType	Optional	Can contain up to 15 digits
Partners' Distributive Share of Montana Additions and Deductions to Income					
490	16a	Interest & dividends not taxable	USAmountType	Optional	Can contain up to 15 digits
500	16b	Taxes based on income or profits	USAmountType	Optional	Can contain up to 15 digits
510	16c	Other additions	USAmountType	Optional	Can contain up to 15 digits
520	16	Montana additions to income	USAmountType	Optional	Can contain up to 15 digits
530	17a	Interest on US Government obligations	USAmountType	Optional	Can contain up to 15 digits
540	17b	Deduction for purchasing recycled material	USAmountType	Optional	Can contain up to 15 digits
550	17c	Other deductions	USAmountType	Optional	Can contain up to 15 digits
560	17	Montana deductions to income	USAmountType	Optional	Can contain up to 15 digits
570	18	Net taxable income/loss	USAmountType	Optional	Can contain up to 15 digits
Partners' Distributive Share of Multistate Apportionment and Allocation					
580	19	Income apportioned to MT percent	RatioType	Optional	6 total digits, 5 fractional digits
590	19	Income apportioned to Montana	USAmountType	Optional	Can contain up to 15 digits
600	20	Income allocated to Montana	USAmountType	Optional	Can contain up to 15 digits
610	21	MT source income multistate taxpayers	USAmountType	Optional	Can contain up to 15 digits
Calculation of Amount Owed or Refund					
620	22	MT composite tax from Sch. III Column E	USAmountType	Optional	Can contain up to 15 digits
630	23	Total partner withholding from Sch.III Column F	USAmountType	Optional	Can contain up to 15 digits
Withholding					
640	24a	Total MT MRW	USAmountType	Optional	Can contain up to 15 digits
650	24b	MT MRW distributed to partners	USAmountType	Optional	Can contain up to 15 digits
660	24c	MT MRW attributable to partnership	USAmountType	Optional	Can contain up to 15 digits
670	24d	Deleted			

Ref #	Line #	Description	Type	Optional/Required	Rule
680	24e	Deleted			
690	25a	Total MT pass-through withholding	USAmountType	Optional	Can contain up to 15 digits
700	25b	MT pass-through withholding dist to prtnrs	USAmountType	Optional	Can contain up to 15 digits
710	25c	MT pass-through attributable to partnership	USAmountType	Optional	Can contain up to 15 digits
720	25d	Deleted			
730	25e	Deleted			
740	25f	Deleted			
750	25g	Deleted			
760	26	Total payment attrib to partnership	USAmountType	Optional	Can contain up to 15 digits
Return Payments					
770	27a	Current yr overpayment applied to next yr	USAmountType	Optional	Can contain up to 15 digits
780	27b	Current year estimated payments	USAmountType	Optional	Can contain up to 15 digits
790	27c	Current year extension payment	USAmountType	Optional	Can contain up to 15 digits
800	27d	Amended – payments made with orig return	USAmountType	Optional	Can contain up to 15 digits
810	27e	Amended – previously issued refunds	USAmountType	Optional	Can contain up to 15 digits
820	27f	Total return payments	USAmountType	Optional	Can contain up to 15 digits
830	28	Amount Due	USAmountType	Optional	Can contain up to 15 digits
Penalties and Interest					
840	29a	PTR information return late filing penalty	USAmountType	Optional	Can contain up to 15 digits
850	29b	Interest on underpayment of estimated tax	USAmountType	Optional	Can contain up to 15 digits
860	29c	Composite income tax late filing penalty	USAmountType	Optional	Can contain up to 15 digits
870	29d	Late payment penalty	USAmountType	Optional	Can contain up to 15 digits
880	29e	Interest	USAmountType	Optional	Can contain up to 15 digits
890	29f	Total penalties and interest	USAmountType	Optional	Can contain up to 15 digits
Amount Owed or Refund					
900	30	Add lines 28 and 29f	USAmountType	Optional	Can contain up to 15 digits
910	31	Amount owed ☹	USAmountType	Optional	Can contain up to 15 digits
920	32	Overpayment (enter as a positive number)	USAmountNNType	Optional	Can contain up to 15 non negative digits
930	33	Amount applied to composite tax next year	USAmountType	Optional	Can contain up to 15 digits
940	34	Refund☺	USAmountType	Optional	Can contain up to 15 digits
General Partner Information					
950		Date signed	DateType	Optional	Format YYYY-MM-DD
960		Printed Name of General Partner	String20Type	Optional	Maximum length of 20 characters
970		Title of General Partner	PersonTitleType	Optional	Maximum length of 35 characters
980		Telephone number of General Partner	PhoneNumberType	Optional	Maximum length of 10 characters

Ref #	Line #	Description	Type	Optional/Required	Rule
Miscellaneous					
990		Do not need PR-1 mailed next year	BooleanType	Optional	Either TRUE or FALSE required
1000		Authorize DOR to discuss with preparer	BooleanType	Optional	Either TRUE or FALSE required
1010		Montana extension checkbox	BooleanType	Optional	Either TRUE or FALSE required

Montana Form PR-1 Schedule I

Apportionment Factors for Multistate Partnerships

Ref #	Line #	Description	Type	Optional/Required	Rule
Property Factor					
100	1a	Land everywhere	USAmountNNType	Optional	Can contain up to 15 non negative digits
110	1a	Land Montana	USAmountNNType	Optional	Can contain up to 15 non negative digits
120	1b	Buildings everywhere	USAmountNNType	Optional	Can contain up to 15 non negative digits
130	1b	Buildings Montana	USAmountNNType	Optional	Can contain up to 15 non negative digits
140	1c	Machinery everywhere	USAmountNNType	Optional	Can contain up to 15 non negative digits
150	1c	Machinery Montana	USAmountNNType	Optional	Can contain up to 15 non negative digits
160	1d	Equipment everywhere	USAmountNNType	Optional	Can contain up to 15 non negative digits
170	1d	Equipment Montana	USAmountNNType	Optional	Can contain up to 15 non negative digits
180	1e	Furniture & fixtures everywhere	USAmountNNType	Optional	Can contain up to 15 non negative digits
190	1e	Furniture & fixtures Montana	USAmountNNType	Optional	Can contain up to 15 non negative digits
200	1f	Leases and leased property everywhere	USAmountNNType	Optional	Can contain up to 15 non negative digits
210	1f	Leases and leased property Montana	USAmountNNType	Optional	Can contain up to 15 non negative digits
220	1g	Inventories everywhere	USAmountNNType	Optional	Can contain up to 15 non negative digits
230	1g	Inventories Montana	USAmountNNType	Optional	Can contain up to 15 non negative digits
240	1h	Depletable assets everywhere	USAmountNNType	Optional	Can contain up to 15 non negative digits
250	1h	Depletable assets Montana	USAmountNNType	Optional	Can contain up to 15 non negative digits
260	1i	Supplies and other everywhere	USAmountNNType	Optional	Can contain up to 15 non negative digits
270	1i	Supplies and other Montana	USAmountNNType	Optional	Can contain up to 15 non negative digits
280	1j	Foreign subs property everywhere	USAmountNNType	Optional	Can contain up to 15 non negative digits
290	1j	Foreign subs property Montana	USAmountNNType	Optional	Can contain up to 15 non negative digits
300	1k	Unconsolidated subs property everywhere	USAmountNNType	Optional	Can contain up to 15 non negative digits
310	1k	Unconsolidated subs property Montana	USAmountNNType	Optional	Can contain up to 15 non negative digits
320	1l	Pass-through entities property everywhere	USAmountNNType	Optional	Can contain up to 15 non negative digits
330	1l	Pass-through entities property Montana	USAmountNNType	Optional	Can contain up to 15 non negative digits
340	1m	Multiply rents by 8 everywhere	USAmountNNType	Optional	Can contain up to 15 non negative digits
350	1m	Multiply rents by 8 Montana	USAmountNNType	Optional	Can contain up to 15 non negative digits
360		Total property value 1a-1m everywhere	USAmountNNType	Optional	Can contain up to 15 non negative digits
370		Total property value 1a-1m Montana	USAmountNNType	Optional	Can contain up to 15 non negative digits
380	1	Property Factor	LargeRatioType	Optional	22 total digits, 12 fractional digits
Payroll Factor					
390	2a	Compensation of officers everywhere	USAmountNNType	Optional	Can contain up to 15 non negative digits

Ref #	Line #	Description	Type	Optional/Required	Rule
400	2a	Compensation of officers Montana	USAmountNNType	Optional	Can contain up to 15 non negative digits
410	2b	Salaries & wages everywhere	USAmountNNType	Optional	Can contain up to 15 non negative digits
420	2b	Salaries & wages Montana	USAmountNNType	Optional	Can contain up to 15 non negative digits
430	2c	Costs of goods sold everywhere	USAmountNNType	Optional	Can contain up to 15 non negative digits
440	2c	Costs of goods sold Montana	USAmountNNType	Optional	Can contain up to 15 non negative digits
450	2d	Other expenses & deductions everywhere	USAmountNNType	Optional	Can contain up to 15 non negative digits
460	2d	Other expenses & deductions Montana	USAmountNNType	Optional	Can contain up to 15 non negative digits
470	2e	Payroll of foreign subs everywhere	USAmountNNType	Optional	Can contain up to 15 non negative digits
480	2e	Payroll of foreign subs Montana	USAmountNNType	Optional	Can contain up to 15 non negative digits
490	2f	Payroll of unconsolidated subs everywhere	USAmountNNType	Optional	Can contain up to 15 non negative digits
500	2f	Payroll of unconsolidated subs Montana	USAmountNNType	Optional	Can contain up to 15 non negative digits
510	2g	Payroll of pass-through entities everywhere	USAmountNNType	Optional	Can contain up to 15 non negative digits
520	2g	Payroll of pass-through entities Montana	USAmountNNType	Optional	Can contain up to 15 non negative digits
530		Total payroll value 2a-2g everywhere	USAmountNNType	Optional	Can contain up to 15 non negative digits
540		Total payroll value 2a-2g Montana	USAmountNNType	Optional	Can contain up to 15 non negative digits
550	2	Payroll Factor	LargeRatioType	Optional	22 total digits, 12 fractional digits
Sales (Gross Receipts) Factor					
560	3a	Gross sales less	USAmountNNType	Optional	Can contain up to 15 non negative digits
570	3b1	Shipped from outside Montana	USAmountNNType	Optional	Can contain up to 15 non negative digits
580	3b2	Shipped from within Montana	USAmountNNType	Optional	Can contain up to 15 non negative digits
590	3c1	United States government	USAmountNNType	Optional	Can contain up to 15 non negative digits
600	3c2	In state where taxpayer is not taxable	USAmountNNType	Optional	Can contain up to 15 non negative digits
610	3d	Sales of other than tangible personal property	USAmountNNType	Optional	Can contain up to 15 non negative digits
620	3e	Net gains reported on Schedule D everywhere	USAmountNNType	Optional	Can contain up to 15 non negative digits
630	3e	Net gains reported on Schedule D Montana	USAmountNNType	Optional	Can contain up to 15 non negative digits
640	3f	Other gross receipts everywhere	USAmountNNType	Optional	Can contain up to 15 non negative digits
650	3f	Other gross receipts Montana	USAmountNNType	Optional	Can contain up to 15 non negative digits
660	3g	Sales/receipts of foreign subs everywhere	USAmountNNType	Optional	Can contain up to 15 non negative digits
670	3g	Sales/receipts of foreign subs Montana	USAmountNNType	Optional	Can contain up to 15 non negative digits
680	3h	Sales/rcpts of unconsolidated subs everywhere	USAmountNNType	Optional	Can contain up to 15 non negative digits
690	3h	Sales/rcpts of unconsolidated subs Montana	USAmountNNType	Optional	Can contain up to 15 non negative digits
700	3i	Sales/rcpts of pass-through entities everywhere	USAmountNNType	Optional	Can contain up to 15 non negative digits
710	3i	Sales/rcpts of pass-through entities Montana	USAmountNNType	Optional	Can contain up to 15 non negative digits
720	3j	Less all intercompany transactions everywhere	USAmountNNType	Optional	Can contain up to 15 non negative digits
730	3j	Less all intercompany transaction Montana	USAmountNNType	Optional	Can contain up to 15 non negative digits
740		Total sales value 3a-3j everywhere	USAmountType	Optional	Can contain up to 15 digits

Ref #	Line #	Description	Type	Optional/Required	Rule
750		Total sales value 3a-3j Montana	USAmountType	Optional	Can contain up to 15 digits
760	3	Sales Factor	LargeRatioType	Optional	22 total digits, 12 fractional digits
770	4	Sum of all factors	LargeRatioType	Optional	22 total digits, 12 fractional digits
780	5	Apportionment Factor	LargeRatioType	Optional	22 total digits, 12 fractional digits

Montana Form PR-1 Schedule II
Montana Partnership Tax Credits

Ref #	Line #	Description	Type	Optional/Required	Rule
Type of Credit					
100	1	Dependent Care Assistance Credit (DCAC)	USAmountNNType	Optional	Can contain up to 15 non negative digits
110	2	College Contribution Credit (CC)	USAmountNNType	Optional	Can contain up to 15 non negative digits
120	3	Health Ins. For Uninsured MT Credit (HI)	USAmountNNType	Optional	Can contain up to 15 non negative digits
130	4	Recycle Credit (RCYL)	USAmountNNType	Optional	Can contain up to 15 non negative digits
140	5	Alternative Energy Prod. Credit (AEPC)	USAmountNNType	Optional	Can contain up to 15 non negative digits
150	6	Multiple CGR Account checkbox	BooleanType	Optional	Either TRUE or FALSE required
160	6	CGR Account ID	StringType	Optional	Maximum length is 13 characters 10 numeric follow by 3 alpha Alpha characters must be CGR Example: 4123456002CGR
170	6	Contractors Gross Receipt Credit	USAmountNNType	Optional	Can contain up to 15 non negative digits
180	7	Alternative Fuel Credit (AFCR)	USAmountNNType	Optional	Can contain up to 15 non negative digits
190	8	Infrastructure Users Fee Credit (IUFC)	USAmountNNType	Optional	Can contain up to 15 non negative digits
200	9	History Property Preservation Credit (Frm 3468)	USAmountNNType	Optional	Can contain up to 15 non negative digits
210	10	Delete			
220	10	Mineral & Coal Exploration Credit	USAmountNNType	Optional	Can contain up to 15 non negative digits
230	11	Empowerment Zone Credit	USAmountNNType	Optional	Can contain up to 15 non negative digits
240	12	Film Production Credit (FPC)	USAmountNNType	Optional	Can contain up to 15 non negative digits
250	13	Biodiesel Blending & Storage Credit (BBSC)	USAmountNNType	Optional	Can contain up to 15 non negative digits
260	14	Oilseed Crushing & Biodiesel Prod Credit (OSC)	USAmountNNType	Optional	Can contain up to 15 non negative digits
270	15	Insure MT Small Business Health Ins FEIN	EINType	Optional	Nine digit FEIN
280	15	Insure MT Small Business Health Insurance	USAmountNNType	Optional	Can contain up to 15 non negative digits
290	16	Temp Emergency Lodging Credit (TELC)	USAmountNNType	Optional	Can contain up to 15 non negative digits
Type of Credit Recapture					
300	17	Historic Property Preservation Credit Recapture	USAmountNNType	Optional	Can contain up to 15 non negative digits
310	18	Film Production Credit Recapture	USAmountNNType	Optional	Can contain up to 15 non negative digits
320	19	Biodiesel Blending & Storage Credit Recapture	USAmountNNType	Optional	Can contain up to 15 non negative digits
330	20	Oilseed Crushing & Biodiesel Credit Recapture	USAmountNNType	Optional	Can contain up to 15 non negative digits

Montana Form PR-1 Schedule III
Montana Partnership Information

Ref #	Line #	Description	Type	Optional/Required	Rule
Partner Information (Unbounded)					
100	1 A	Name of partners	StringType	Optional	Maximum length is 60 characters
110	1 A	US Address – Address Line 1	StreetAddressType	Required	AN, Maximum length is 35 characters
120	1 A	US Address – Address Line 2	StreetAddressType	Optional	AN, Maximum length is 35 characters
130	1 A	US Address – City	CityType	Required	AN, Maximum length is 22 characters
140	1 A	US Address – State	StateType	Required	Enumerations list Max length is 2 characters
150	1 A	US Address – ZIP Code	ZIPCodeType	Required	Numeric
160	1 A	Foreign Address – Address Line 1	StreetAddressType	Required	AN, Maximum length is 35 characters
170	1 A	Foreign Address – Address Line 2	StreetAddressType	Optional	AN, Maximum length is 35 characters
180	1 A	Foreign Address – City	TextType	Optional	AN, Maximum length is 50 characters
190	1 A	Foreign Address – Province or State	TextType	Optional	AN, Maximum length is 50 characters
200	1 A	Foreign Address – Country	CountryType	Required	Enumerations list Max length is 2 characters
210	1 A	Foreign Address – Postal Code	TextType	Optional	AN, Maximum length is 50 characters
220	1 B	Entity Type	StringType	Optional	Enumerations list Max length is 1 character
230	1 B	ID – SSN	SSNType	Optional	Nine digit SSN
240	1 B	ID – FEIN	EINType	Optional	Nine digit FEIN
250	1 C	Residency – Resident	BooleanType	Optional	Either TRUE or FALSE required
260	1 C	Residency – Non Resident	BooleanType	Optional	Either TRUE or FALSE required
270	1 D	Ownership percentage	RatioType	Optional	6 total digits, 5 fractional digits
280	1 E	Composite Income Tax Checkbox	**BooleanType**	Optional	**Either TRUE or FALSE required**
280	1 E	Composite Income Tax	USAmountNNType	Optional	Can contain up to 15 non negative digits
290	1 F	Partner withholding	USAmountNNType	Optional	Can contain up to 15 non negative digits
300	1 G	PT-AGR or PT-STM year	YearType	Optional	Four digit year
Total of Columns D, E and F					
310		Column D total	RatioType	Optional	6 total digits, 5 fractional digits
320		Column E total	USAmountType	Optional	Can contain up to 15 digits
330		Column F total	USAmountNNType	Optional	Can contain up to 15 non negative digits

Ref #	Line #	Description	Type	Optional/Required	Rule

Montana Form PR-1 Schedule IV
Montana Partnership Composite Income Tax Schedule

Part I					
100		Number of participating partners	IntegerNNType	Optional	Enter as a positive value
Part II Composite Tax Ratio					
110	a1	Business in MT – Enter Line 15 of PR-1	USAmountType	Optional	Can contain up to 15 digits
120	a2	Business in MT – Enter Line 21 of PR-1	USAmountType	Optional	Can contain up to 15 digits
130	a4	Business in MT – Col 2 divided by Col 1	RatioType	Optional	6 total digits, 5 fractional digits
Part III (Unbounded)					
140	1 A	Name of partner	StringType	Optional	Maximum length is 60 characters
150	1 B	ID – SSN	SSNType	Optional	Nine digit SSN
160	1 B	ID – FEIN	EINType	Optional	Nine digit FEIN
170	1 C	Partners share of federal income from entity	USAmountType	Optional	Can contain up to 15 digits
180	1 D	Standard deduction	USAmountType	Optional	Can contain up to 15 digits
190	1 E	Exemption	USAmountType	Optional	Can contain up to 15 digits
200	1 F	Montana taxable Income	USAmountType	Optional	Can contain up to 15 digits
210	1 G	Tax from table	USAmountType	Optional	Can contain up to 15 digits
220	1 H	Montana composite income tax	USAmountType	Optional	Can contain up to 15 digits
230		Total composite income tax liability	USAmountNNType	Optional	Can contain up to 15 non negative digits

Montana Form PR-1 Schedule VI
Reporting of Special Transactions

Ref #	Line #	Description	Type	Optional/Required	Rule
100	1	Partnership filed a federal Form 8918	**BooleanType**	Optional	**Either TRUE or FALSE is required**
110	2	Partnership filed a federal Form 8824	**BooleanType**	Optional	**Either TRUE or FALSE is required**
120	3	Partnership filed a federal Form 8865	**BooleanType**	Optional	**Either TRUE or FALSE is required**
130	4	Partnership filed a federal Form 8886	**BooleanType**	Optional	**Either TRUE or FALSE is required**
140	5	Partnership made payment to related partied	**BooleanType**	Optional	**Either TRUE or FALSE is required**
Related parties who received payments (Unbounded)					
150	5	Name of related party	StringType	Optional	Maximum length is 60 characters
160	5	FEIN of related party	EINType	Optional	Nine digit FEIN
170	5	Amount of payment	USAmountType	Optional	Can contain up to 15 digits

Montana Form CLT-4S

S Corporation Information and Composite Tax Return (Page 1 & 2)

Ref #	Line #	Description	Type	Optional/Required	Rule
Tax Return Information					
10		Software vendor name	StringType	Required	Software firm name
20		Software product name	StringType	Required	Software product name
30		NACTP ID	StringType	Optional	NACTP assigned software vendor identification
100		Tax period begin	Date Type	Optional	Format YYYY-MM-DD
110		Tax period end	Date Type	Optional	Format YYYY-MM-DD
120		Initial return checkbox	BooleanType	Optional	Either TRUE or FALSE required
130		Final return checkbox	BooleanType	Optional	Either TRUE or FALSE required
140		Amended return checkbox	BooleanType	Optional	Either TRUE or FALSE required
150		Refund return checkbox	BooleanType	Optional	Either TRUE or FALSE required
160		Delete			
170		*FEIN*	*EINType*		*Numeric*
180		Number of K1's included	IntegerType	Optional	Numeric non negative
190		Number of resident shareholders	IntegerType	Optional	Numeric non negative
200		Number of nonresident shareholders	IntegerType	Optional	Numeric non negative
210		Number for other types of shareholders	IntegerType	Optional	Numeric non negative
220		State incorporated in	String20Type	Optional	Can contain up to 20 characters Send only two character state abbreviation
230		Date of incorporation	DateType	Optional	Format YYYY-MM-DD
240		Federal Business Code/NAICS	StringType	Optional	Maximum length of 6 characters
250		MT Secretary of State ID number	StringType	Optional	Limited to 7 alphanumeric characters
260		Date certificate of authority received	DateType	Optional	Format YYYY-MM-DD
Shareholders Pro Rata Share of Income Item (Form 1120S, Schedule K)					
270	1	Ordinary business income/loss	USAmountType	Optional	Can contain up to 15 digits
280	2	Net rental real estate income/loss	USAmountType	Optional	Can contain up to 15 digits
290	3a	Other gross rental income/loss	USAmountType	Optional	Can contain up to 15 digits
300	3b	Expenses from other rental activities	USAmountType	Optional	Can contain up to 15 digits
310	3c	Other net rental income/loss	USAmountType	Optional	Can contain up to 15 digits
320	4	Interest income	USAmountType	Optional	Can contain up to 15 digits
330	5	Ordinary dividends	USAmountType	Optional	Can contain up to 15 digits
340	6	Royalties	USAmountType	Optional	Can contain up to 15 digits
350	7	Net short term capital gain/loss	USAmountType	Optional	Can contain up to 15 digits
360	8	Net long term capital gain/loss	USAmountType	Optional	Can contain up to 15 digits

Ref #	Line #	Description	Type	Optional/Required	Rule
370	9	Net section 1231 gain/loss	USAmountType	Optional	Can contain up to 15 digits
380	10	Other income/loss	USAmountType	Optional	Can contain up to 15 digits
390	11	Total federal income/loss	USAmountType	Optional	Can contain up to 15 digits
Shareholders' Distributive Share of Deduction Items (Form 1120S, Schedule K)					
400	12a	Section 179 deduction	USAmountType	Optional	Can contain up to 15 digits
410	12b	Contributions	USAmountType	Optional	Can contain up to 15 digits
420	12c	Investment interest expense	USAmountType	Optional	Can contain up to 15 digits
430	12d	Section 59(e)(2) expenditures	USAmountType	Optional	Can contain up to 15 digits
440	12e	Other deductions	USAmountType	Optional	Can contain up to 15 digits
450	13	Total federal deductions	USAmountType	Optional	Can contain up to 15 digits
460	14	Federal income from all sources	USAmountType	Optional	Can contain up to 15 digits
Shareholders' Distributive Share of Montana Additions and Deductions to Income					
470	15a	Interest & dividends not taxable	USAmountType	Optional	Can contain up to 15 digits
480	15b	Taxes based on income or profits	USAmountType	Optional	Can contain up to 15 digits
490	15c	Other additions	USAmountType	Optional	Can contain up to 15 digits
500	15	Montana additions to income	USAmountType	Optional	Can contain up to 15 digits
510	16a	Interest on US Government obligations	USAmountType	Optional	Can contain up to 15 digits
520	16b	Deduction for purchasing recycled material	USAmountType	Optional	Can contain up to 15 digits
530	16c	Other deductions	USAmountType	Optional	Can contain up to 15 digits
540	16	Montana deductions to income	USAmountType	Optional	Can contain up to 15 digits
550	17	Net taxable income/loss	USAmountType	Optional	Can contain up to 15 digits
Shareholders' Distributive Share of Multistate Apportionment and Allocation					
560	18	Income apportioned to MT percent	RatioType	Optional	6 total digits, 5 fractional digits
570	18	Income apportioned to Montana	USAmountType	Optional	Can contain up to 15 digits
580	19	Income allocated to Montana	USAmountType	Optional	Can contain up to 15 digits
590	20	MT source income multistate taxpayers	USAmountType	Optional	Can contain up to 15 digits
Calculation of Amount Owed or Refund					
600	21	MT composite tax from Sch. III, Column E	USAmountType	Optional	Can contain up to 15 digits
610	22	Total shareholder withholding from Sch.III Col F	USAmountType	Optional	Can contain up to 15 digits
Withholding					
620	23a	Total MT MRW	USAmountType	Optional	Can contain up to 15 digits
630	23b	MRW withheld distributed to shareholders	USAmountType	Optional	Can contain up to 15 digits
640	23c	MT MRW withheld attributable to S-corp	USAmountType	Optional	Can contain up to 15 digits
650	23d	Deleted			
660	23e	Deleted			

Ref #	Line #	Description	Type	Optional/Required	Rule
670	24a	Total MT pass-through withholding	USAmountType	Optional	Can contain up to 15 digits
680	24b	MT pass-through withholding dist to shareholUSAmountType		Optional	Can contain up to 15 digits
690	24c	MT pass-through withholding attrib to Scorp	USAmountType	Optional	Can contain up to 15 digits
700	24d	Deleted			
710	24e	Deleted			
720	24f	Deleted			
730	24g	Deleted			
740	25	Total withholding payments attrib to Scorp	USAmountType	Optional	Can contain up to 15 digits
Return Payments					
750	26a	Current yr overpayment applied to next yr	USAmountType	Optional	Can contain up to 15 digits
760	26b	Current year estimated payments	USAmountType	Optional	Can contain up to 15 digits
770	26c	Current year extension payment	USAmountType	Optional	Can contain up to 15 digits
780	26d	Amended – payments made with orig return	USAmountType	Optional	Can contain up to 15 digits
790	26e	Amended – previously issued refunds	USAmountType	Optional	Can contain up to 15 digits
800	26f	Total return payments	USAmountType	Optional	Can contain up to 15 digits
810	27	Amount Due	USAmountType	Optional	Can contain up to 15 digits
Penalties and Interest					
820	28a	S-Corp information return late filing penalty	USAmountType	Optional	Can contain up to 15 digits
830	28b	Interest on underpayment of estimated tax	USAmountType	Optional	Can contain up to 15 digits
840	28c	Composite income tax late filing penalty	USAmountType	Optional	Can contain up to 15 digits
850	28d	Late payment penalty	USAmountType	Optional	Can contain up to 15 digits
860	28e	Interest	USAmountType	Optional	Can contain up to 15 digits
870	28f	Total penalties and interest	USAmountType	Optional	Can contain up to 15 digits
Amount Owed or Refund					
880	29	Add lines 27 and 28f	USAmountType	Optional	Can contain up to 15 digits
890	30	Amount owed ☹	USAmountType	Optional	Can contain up to 15 digits
900	31	Overpayment (enter as a positive number)	USAmountType	Optional	Can contain up to 15 digits
910	32	Amount applied to composite tax next year	USAmountType	Optional	Can contain up to 15 digits
920	33	Refund☺	USAmountType	Optional	Can contain up to 15 digits
Officer Information					
930		Date signed	DateType	Optional	Format YYYY_MM-DD
940		Printed Name of Officer	String20Type	Optional	Maximum length of 20 characters
950		Title of Officer	PersonTitleType	Optional	Maximum length of 35 characters
960		Telephone number of Officer	PhoneNumberType	Optional	Maximum length of 10 characters

Ref #	Line # Description	Type	Optional/Required	Rule
Miscellaneous				
970	Do not need CLT-4S mailed next year	BooleanType	Optional	Either TRUE or FALSE required
980	Authorize DOR to discuss with preparer	BooleanType	Optional	Either TRUE or FALSE required
990	Montana extension checkbox	BooleanType	Optional	Either TRUE or FALSE required

Ref #	Line #	Description	Type	Optional/Required	Rule

Montana Form CLT-4S Schedule I
Apportionment Factors for Multistate S Corporations

Property Factor

100	1a	Land everywhere	USAmountNNType	Optional	Can contain up to 15 non negative digits
110	1a	Land Montana	USAmountNNType	Optional	Can contain up to 15 non negative digits
120	1b	Buildings everywhere	USAmountNNType	Optional	Can contain up to 15 non negative digits
130	1b	Buildings Montana	USAmountNNType	Optional	Can contain up to 15 non negative digits
140	1c	Machinery everywhere	USAmountNNType	Optional	Can contain up to 15 non negative digits
150	1c	Machinery Montana	USAmountNNType	Optional	Can contain up to 15 non negative digits
160	1d	Equipment everywhere	USAmountNNType	Optional	Can contain up to 15 non negative digits
170	1d	Equipment Montana	USAmountNNType	Optional	Can contain up to 15 non negative digits
180	1e	Furniture & fixtures everywhere	USAmountNNType	Optional	Can contain up to 15 non negative digits
190	1e	Furniture & fixtures Montana	USAmountNNType	Optional	Can contain up to 15 non negative digits
200	1f	Leases and leased property everywhere	USAmountNNType	Optional	Can contain up to 15 non negative digits
210	1f	Leases and leased property Montana	USAmountNNType	Optional	Can contain up to 15 non negative digits
220	1g	Inventories everywhere	USAmountNNType	Optional	Can contain up to 15 non negative digits
230	1g	Inventories Montana	USAmountNNType	Optional	Can contain up to 15 non negative digits
240	1h	Depletable assets everywhere	USAmountNNType	Optional	Can contain up to 15 non negative digits
250	1h	Depletable assets Montana	USAmountNNType	Optional	Can contain up to 15 non negative digits
260	1i	Supplies and other everywhere	USAmountNNType	Optional	Can contain up to 15 non negative digits
270	1i	Supplies and other Montana	USAmountNNType	Optional	Can contain up to 15 non negative digits
280	1j	Foreign subs property everywhere	USAmountNNType	Optional	Can contain up to 15 non negative digits
290	1j	Foreign subs property Montana	USAmountNNType	Optional	Can contain up to 15 non negative digits
300	1k	Unconsolidated subs property everywhere	USAmountNNType	Optional	Can contain up to 15 non negative digits
310	1k	Unconsolidated subs property Montana	USAmountNNType	Optional	Can contain up to 15 non negative digits
320	1l	Pass-through entities property everywhere	USAmountNNType	Optional	Can contain up to 15 non negative digits
330	1l	Pass-through entities property Montana	USAmountNNType	Optional	Can contain up to 15 non negative digits
340	1m	Multiply rents by 8 everywhere	USAmountNNType	Optional	Can contain up to 15 non negative digits
350	1m	Multiply rents by 8 Montana	USAmountNNType	Optional	Can contain up to 15 non negative digits
360		Total property value 1a-1m everywhere	USAmountNNType	Optional	Can contain up to 15 non negative digits
370		Total property value 1a-1m Montana	USAmountNNType	Optional	Can contain up to 15 non negative digits
380	1	Property Factor	LargeRatioType	Optional	22 total digits, 12 fractional digits

Ref #	Line #	Description	Type	Optional/Required	Rule
Payroll Factor					
390	2a	Compensation of officers everywhere	USAmountNNType	Optional	Can contain up to 15 non negative digits
400	2a	Compensation of officers Montana	USAmountNNType	Optional	Can contain up to 15 non negative digits
410	2b	Salaries & wages everywhere	USAmountNNType	Optional	Can contain up to 15 non negative digits
420	2b	Salaries & wages Montana	USAmountNNType	Optional	Can contain up to 15 non negative digits
430	2c	Costs of goods sold everywhere	USAmountNNType	Optional	Can contain up to 15 non negative digits
440	2c	Costs of goods sold Montana	USAmountNNType	Optional	Can contain up to 15 non negative digits
450	2d	Other expenses & deductions everywhere	USAmountNNType	Optional	Can contain up to 15 non negative digits
460	2d	Other expenses & deductions Montana	USAmountNNType	Optional	Can contain up to 15 non negative digits
470	2e	Payroll of foreign subs everywhere	USAmountNNType	Optional	Can contain up to 15 non negative digits
480	2e	Payroll of foreign subs Montana	USAmountNNType	Optional	Can contain up to 15 non negative digits
490	2f	Payroll of unconsolidated subs everywhere	USAmountNNType	Optional	Can contain up to 15 non negative digits
500	2f	Payroll of unconsolidated subs Montana	USAmountNNType	Optional	Can contain up to 15 non negative digits
510	2g	Payroll of pass-through entities everywhere	USAmountNNType	Optional	Can contain up to 15 non negative digits
520	2g	Payroll of pass-through entities Montana	USAmountNNType	Optional	Can contain up to 15 non negative digits
530		Total payroll value 2a-2g everywhere	USAmountNNType	Optional	Can contain up to 15 non negative digits
540		Total payroll value 2a-2g Montana	USAmountNNType	Optional	Can contain up to 15 non negative digits
550	2	Payroll Factor	LargeRatioType	Optional	22 total digits, 12 fractional digits
Sales (Gross Receipts) Factor					
560	3a	Gross sales less	USAmountNNType	Optional	Can contain up to 15 non negative digits
570	3b1	Shipped from outside Montana	USAmountNNType	Optional	Can contain up to 15 non negative digits
580	3b2	Shipped from within Montana	USAmountNNType	Optional	Can contain up to 15 non negative digits
590	3c1	United States government	USAmountNNType	Optional	Can contain up to 15 non negative digits
600	3c2	In state where taxpayer is not taxable	USAmountNNType	Optional	Can contain up to 15 non negative digits
610	3d	Sales of other than tangible personal property	USAmountNNType	Optional	Can contain up to 15 non negative digits
620	3e	Net gains reported on Schedule D everywhere	USAmountNNType	Optional	Can contain up to 15 non negative digits
630	3e	Net gains reported on Schedule D Montana	USAmountNNType	Optional	Can contain up to 15 non negative digits
640	3f	Other gross receipts everywhere	USAmountNNType	Optional	Can contain up to 15 non negative digits
650	3f	Other gross receipts Montana	USAmountNNType	Optional	Can contain up to 15 non negative digits
660	3g	Sales/receipts of foreign subs everywhere	USAmountNNType	Optional	Can contain up to 15 non negative digits
670	3g	Sales/receipts of foreign subs Montana	USAmountNNType	Optional	Can contain up to 15 non negative digits
680	3h	Sales/rcpts of unconsolidated subs everywhere	USAmountNNType	Optional	Can contain up to 15 non negative digits
690	3h	Sales/rcpts of unconsolidated subs Montana	USAmountNNType	Optional	Can contain up to 15 non negative digits
700	3i	Sales/rcpts of pass-through entities everywhere	USAmountNNType	Optional	Can contain up to 15 non negative digits
710	3i	Sales/rcpts of pass-through entities Montana	USAmountNNType	Optional	Can contain up to 15 non negative digits
720	3j	Less all intercompany transactions everywhere	USAmountNNType	Optional	Can contain up to 15 non negative digits

Ref #	Line #	Description	Type	Optional/Required	Rule
730	3j	Less all intercompany transaction Montana	USAmountNNType	Optional	Can contain up to 15 non negative digits
740		Total sales value 3a-3j everywhere	USAmountType	Optional	Can contain up to 15 digits
750		Total sales value 3a-3j Montana	USAmountType	Optional	Can contain up to 15 digits
760	3	Sales Factor	LargeRatioType	Optional	22 total digits, 12 fractional digits
770	4	Sum of all factors	LargeRatioType	Optional	22 total digits, 12 fractional digits
780	5	Apportionment Factor	LargeRatioType	Optional	22 total digits, 12 fractional digits

Montana Form CLT-4S Schedule II
Montana S-Corporation Tax Credits

Ref #	Line #	Description	Type	Optional/Required	Rule
Type of Credit					
100	1	Dependent Care Assistance Credit (DCAC)	USAmountNNType	Optional	Can contain up to 15 non negative digits
110	2	College Contribution Credit (CC)	USAmountNNType	Optional	Can contain up to 15 non negative digits
120	3	Health Ins. For Uninsured MT Credit (HI)	USAmountNNType	Optional	Can contain up to 15 non negative digits
130	4	Recycle Credit (RCYL)	USAmountNNType	Optional	Can contain up to 15 non negative digits
140	5	Alternative Energy Prod. Credit (AEPC)	USAmountNNType	Optional	Can contain up to 15 non negative digits
150	6	Multiple CGR Account checkbox	BooleanType	Optional	Either TRUE or FALSE required
160	6	CGR Account ID	StringType	Optional	Maximum length is 13 characters 10 numeric follow by 3 alpha Alpha characters must be CGR Example: 4123456002CGR
170	6	Contractors Gross Receipt Credit	USAmountNNType	Optional	Can contain up to 15 non negative digits
180	7	Alternative Fuel Credit (AFCR)	USAmountNNType	Optional	Can contain up to 15 non negative digits
190	8	Infrastructure Users Fee Credit (IUFC)	USAmountNNType	Optional	Can contain up to 15 non negative digits
200	9	Historic Property Preservation Credit (Frm 3468)	USAmountNNType	Optional	Can contain up to 15 non negative digits
210		Delete			
220	10	Mineral & Coal Exploration Credit	USAmountNNType	Optional	Can contain up to 15 non negative digits
230	11	Empowerment Zone Credit	USAmountNNType	Optional	Can contain up to 15 non negative digits
240	12	Film Production Credit (FPC)	USAmountNNType	Optional	Can contain up to 15 non negative digits
250	13	Biodiesel Blending & Storage Credit (BBSC)	USAmountNNType	Optional	Can contain up to 15 non negative digits
260	14	Oilseed Crushing & Biodiesel Prod Credit (OSC)	USAmountNNType	Optional	Can contain up to 15 non negative digits
270	15	Insure MT Small Business Health Ins FEIN	EINType	Optional	Nine digit FEIN
280	15	Insure MT Small Business Health Insurance	USAmountNNType	Optional	Can contain up to 15 non negative digits
290	16	Temp Emergency Lodging Credit (TELC)	USAmountNNType	Optional	Can contain up to 15 non negative digits
Type of Credit Recapture					
300	17	Historic Property Preservation Credit Recapture	USAmountNNType	Optional	Can contain up to 15 non negative digits
310	18	Film Production Credit Recapture	USAmountNNType	Optional	Can contain up to 15 non negative digits
320	19	Biodiesel Blending & Storage Credit Recapture	USAmountNNType	Optional	Can contain up to 15 non negative digits
330	20	Oilseed Crushing & Biodiesel Credit Recapture	USAmountNNType	Can contain up to 15 non negative digits	

Montana Form CLT-4S Schedule III
Montana S- Corporation Information

Ref #	Line #	Description	Type	Optional/Required	Rule
Partner Information (Unbounded)					
100	1 A	Name of partners	StringType	Optional	Maximum length is 60 characters
110	1 A	US Address – Address Line 1	StreetAddressType	Required	AN, Maximum length is 35 characters
120	1 A	US Address – Address Line 2	StreetAddressType	Optional	AN, Maximum length is 35 characters
130	1 A	US Address – City	CityType	Required	AN, Maximum length is 22 characters
140	1 A	US Address – State	StateType	Required	Enumerations list Max length is 2 characters
150	1 A	US Address – ZIP Code	ZIPCodeType	Required	Numeric
160	1 A	Foreign Address – Address Line 1	StreetAddressType	Required	AN, Maximum length is 35 characters
170	1 A	Foreign Address – Address Line 2	StreetAddressType	Optional	AN, Maximum length is 35 characters
180	1 A	Foreign Address – City	TextType	Optional	AN, Maximum length is 50 characters
190	1 A	Foreign Address – Province or State	TextType	Optional	AN, Maximum length is 50 characters
200	1 A	Foreign Address – Country	CountryType	Required	Enumerations list Max length is 2 characters
210	1 A	Foreign Address – Postal Code	TextType	Optional	AN, Maximum length is 50 characters
220	1 B	Entity Type	StringType	Optional	Enumerations list Max length is 1 character
230	1 B	ID – SSN	SSNType	Optional	Nine digit SSN
240	1 B	ID – FEIN	EINType	Optional	Nine digit FEIN
250	1 C	Residency – Resident	BooleanType	Optional	Either TRUE or FALSE required
260	1 C	Residency – Non Resident	BooleanType	Optional	Either TRUE or FALSE required
270	1 D	Ownership percentage	RatioType	Optional	6 total digits, 5 fractional digits
280	1 E	Composite Income Tax Checkbox	**BooleanType**	Optional	**Either TRUE or FALSE is required**
290	1 E	Composite Income Tax	USAmountNNType	Optional	Can contain up to 15 non negative digits
300	1 F	Partner withholding	USAmountNNType	Optional	Can contain up to 15 non negative digits
310	1 G	PT-AGR or PT-STM year	YearType	Optional	Four digit year
Total of Columns D, E and F					
320		Column D total	RatioType	Optional	6 total digits, 5 fractional digits
330		Column E total	USAmountType	Optional	Can contain up to 15 digits
340		Column F total	USAmountNNType	Optional	Can contain up to 15 non negative digits

Ref #	Line #	Description	Type	Optional/Required	Rule

Montana Form CLT-4S Schedule IV
Montana S Corporation Composite Income Tax Schedule

Part I					
100		Number of participating shareholders	IntegerType	Optional	Enter as a positive value
Part II Composite Tax Ratio					
110	a1	Business in MT – Enter line 15 of PR-1	USAmountNNType	Optional	Can contain up to 15 non negative digits
120	a2	Business in MT – Enter line 18 of PR-1	USAmountNNType	Optional	Can contain up to 15 non negative digits
130	a4	Business in MT – Col 2 divided by Col 1	RatioType	Optional	6 total digits, 5 fractional digits
	Part III (Unbounded)				
140	1 A	Name of partner	StringType	Optional	Maximum length is 60 characters
150	1 B	ID – SSN	SSNType	Optional	Nine digit SSN
160	1 B	ID – FEIN	EINType	Optional	Nine digit FEIN
170	1 C	Partners share of federal income from entity	USAmountType	Optional	Can contain up to 15 digits
180	1 D	Standard deduction	USAmountType	Optional	Can contain up to 15 digits
190	1 E	Exemption	USAmountType	Optional	Can contain up to 15 digits
200	1 F	Montana taxable Income	USAmountType	Optional	Can contain up to 15 digits
210	1 G	Tax from table	USAmountType	Optional	Can contain up to 15 digits
220	1 H	Montana composite income tax	USAmountType	Optional	Can contain up to 15 digits
230		Total composite income tax liability	USAmountNNType	Optional	Can contain up to 15 non negative digits

Montana Form CLT-4S Schedule VI
Reporting of Special Transactions

Ref #	Line #	Description	Type	Optional/Required	Rule
100	1	S-Corporation filed a federal Form 8918	**BooleanType**	Optional	**Either TRUE or FALSE required**
110	2	S-Corporation filed a federal Form 8824	**BooleanType**	Optional	**Either TRUE or FALSE required**
120	3	S-Corporation filed a federal Form 8865	**BooleanType**	Optional	**Either TRUE or FALSE required**
130	4	S-Corporation filed a federal Form 8886	**BooleanType**	Optional	**Either TRUE or FALSE required**
140	5	S-Corporation filed a federal Form 8023	BooleanType	Optional	Either TRUE or FALSE required
150	6	S-Corporation made payment to related partied	**BooleanType**	Optional	**Either TRUE or FALSE required**
160	6	Name of related party	StringType	Optional	Maximum length is 60 characters
170	6	FEIN of related party	EINType	Optional	Nine digit FEIN
180	6	Amount of payment	USAmountType	Optional	Can contain up to 15 digits

Alternative Energy Production Credit (AEPC)

Ref #	Line #	Description	Type	Optional/Required	Rule
100		Taxpayer name as it appears on tax return	String64Type	Optional	Maximum length is 64 characters
110		Taxpayer ID – SSN	SSNType	Optional	Nine digit SSN
120		Taxpayer ID – FEIN	EINType	Optional	Nine digit FEIN
Part I – Qualifications					
130	1	Made at least $5000 investment	BooleanType	Optional	Either TRUE or FALSE required
140	2	Have taxes due caused by 1 of the following	BooleanType	Optional	Either TRUE or FALSE required
150	2	Manufacturing plants produced alt energy	BooleanType	Optional	Either TRUE or FALSE required
160	2	New or expanded business facility	BooleanType	Optional	Either TRUE or FALSE required
170	2	Alt energy equip claimed was made	BooleanType	Optional	Either TRUE or FALSE required
Part II – Credit Calculation					
180		Provide location of alt energy assets	String50Type	Optional	Maximum length is 50 characters
190	3	Eligible alternative energy equip. investment	USAmountType	Optional	Can contain up to 15 digits
200	4	Amount of grants received	USAmountNNType	Optional	Can contain up to 15 non negative digits
210	5	Subtract Line 3 from Line 4	USAmountType	Optional	Can contain up to 15 digits
220	6	Multiply Line 5 by 35% (.35)	USAmountType	Optional	Can contain up to 15 digits
230	7	Remaining credit carry forward amounts	USAmountType	Optional	Can contain up to 15 digits
240	8	Total Alternative Energy Production Credit	USAmountType	Optional	Can contain up to 15 digits
Part III – Credit Calculation					
250		Business name of Partnership or S-Corp	String50Type	Optional	Maximum length is 50 characters
260		FEIN	EINType	Optional	Maximum length of 9 digits
270	9	Your portion of Alt energy prod credit	USAmountType	Optional	Can contain up to 15 digits
280	10	Remaining credit Carryforward from prev yrs	USAmountType	Optional	Can contain up to 15 digits
290	11	Total Alternative Energy Production Credit	USAmountType	Optional	Can contain up to 15 digits
Part IV					
300	12	Net income from alt energy equipment	USAmountType	Optional	Can contain up to 15 digits
310	13	Montana taxable income	USAmountType	Optional	Can contain up to 15 digits
320	14	Divide Line 12 by Line 13	RatioType	Optional	6 total digits, 5 fractional digits
330	15	Total tax as shown on return	USAmountType	Optional	Can contain up to 15 digits
340	16	Maximum alt energy production credit	USAmountType	Optional	Can contain up to 15 digits
350	17	Alternative Energy Production Credit	USAmountType	Optional	Can contain up to 15 digits
Income Allocation Schedule					
360	18a	Business property Total Factors	USAmountType	Optional	Can contain up to 15 digits

Ref #	Line #	Description	Type	Optional/Required	Rule
370	18b	Business property Montana Factors	USAmountType	Optional	Can contain up to 15 digits
380	18c	Business property Factor	RatioType	Optional	6 total digits, 5 fractional digits
390	19a	Business payroll Total Factors	USAmountType	Optional	Can contain up to 15 digits
400	19b	Business payroll Montana Factors	USAmountType	Optional	Can contain up to 15 digits
410	19c	Business payroll Factor	RatioType	Optional	6 total digits, 5 fractional digits
420	20a	Business sales Total Factors	USAmountType	Optional	Can contain up to 15 digits
430	20b	Business sales Montana Factors	USAmountType	Optional	Can contain up to 15 digits
440	20c	Business sales Factor	RatioType	Optional	6 total digits, 5 fractional digits
450	21	Sum of Line 18, 19 and 20	LargeRatioType	Optional	22 total digits, 12 fractional digits
460	22	Divide Line 23 by Line 22	RatioType	Optional	6 total digits, 5 fractional digits
470	23	Net Income from business	USAmountType	Optional	Can contain up to 15 digits
480	24	Net income attributed to AEP equipment	USAmountType	Optional	Can contain up to 15 digits

Ref #	Line #	Description	Type	Optional/Required	Rule

Alternative Fuel Credit (AFCR)

100		Taxpayer name as it appears on tax return	String64Type	Optional	Maximum length is 64 characters
110		Taxpayer ID – SSN	SSNType	Optional	Nine digit SSN
120		Taxpayer ID – FEIN	EINType	Optional	Nine digit FEIN
130		Pass-through credit entity name	String50Type	Optional	Maximum length is 50 characters
140		Pass-through credit entity FEIN	EINType	Optional	Nine digit FEIN
150		Portion of Alternative fuel credit	**RatioType**	Optional	**6 total digits, 5 fractional digits**
160		Year of vehicle converted	YearType	Optional	Four digit year
170		Make of vehicle converted	StringType	Optional	Maximum length is 35 characters
180		Date conversion was completed	DateType	Optional	Format YYYY-MM-DD
190		Alternative fuel type	StringTpye	Optional	Maximum length is 25 characters
200		Gross vehicle weight	IntergerPosType	Optional	Must be a positive number
210	1	Equipment & labor cost of conversion	USAmountType	Optional	Can contain up to 15 digits
220	2	Cost of conversion multiplied by .5	USAmountType	Optional	Can contain up to 15 digits
230	3	Credit amount based on vehicle weight	USAmountNNType	Optional	Can contain up to 15 non negative digits
240	4	Allowable alternative fuel credit for this vehicle	USAmountType	Optional	Can contain up to 15 digits
250	5	Total of all Form AFCR's – Total Credit	USAmountType	Optional	Can contain up to 15 digits

Biodiesel Blending and Storage Credit (BBSC)

100		Taxpayer name as it appears on tax return	String64Type	Optional	Maximum length is 64 characters
110		Taxpayer ID – SSN	SSNType	Optional	Nine digit SSN
120		Taxpayer ID – FEIN	EINType	Optional	Nine digit FEIN
130		Pass-through credit entity name	String50Type	Optional	Maximum length is 50 characters
140		Pass-through credit entity FEIN	EINType	Optional	Nine digit FEIN
150		Portion of BBSC	USAmountType	Optional	Can contain up to 15 digits
Part I – Biodiesel Blending and Storage Credit					
160		Date began blending biodiesel for sale	DateType	Optional	Format YYYY-MM-DD
170	1	Blend with petroleum diesel for sale during year	BooleanType	Optional	Either TRUE or FALSE required
180	2	Is equipment was to blend primarily in Montana	BooleanType	Optional	Either TRUE or FALSE required
190	3	Is biodiesel made from Montana feedstocks	BooleanType	Optional	Either TRUE or FALSE required
Part II – Credit Computation					

Ref #	Line #	Description	Type	Optional/Required	Rule
200	1	Cost of storage & blending equip (distributor)	USAmountType	Optional	Can contain up to 15 digits
210	2	Multiply distributor costs (Line 1) by .15	USAmountType	Optional	Can contain up to 15 digits Maximum value is 52500
220	3	Cost of storage & blending equip (outlet)	USAmountType	Optional	Can contain up to 15 digits
230	4	Multiply outlet costs (Line 3) by .15	USAmountType	Optional Optional	Can contain up to 15 digits Maximum value is 7500
240	5	Total credit carried forward from previous years	USAmountType	Optional	Can contain up to 15 digits
250	6	Biodiesel Blending and Storage Credit	USAmountType	Optional	Can contain up to 15 digits

College Contribution Credit (CC)

100		Taxpayer name as it appears on tax return	String64Type	Optional	Maximum length is 64 characters
110		Taxpayer ID – SSN	SSNType	Optional	Nine digit SSN
120		Taxpayer ID – FEIN	EINType	Optional	Nine digit FEIN
130		Pass-through credit entity name	String50Type	Optional	Maximum length is 50 characters
140		Pass-through credit entity FEIN	EINType	Optional	Nine digit FEIN
150		Your share of College Contribution Credit	**RatioType**	Optional	**6 total digits, 5 fractional digits**
160		List of Colleges or Universities (~~Unbounded~~)	StringType	Optional	Maximum length is 500 characters
170	1	Total amount of contribution	USAmountType	Optional	Can contain up to 15 digits
180	2	College Contribution Credit	USAmountType	Optional	Can contain up to 15 digits Maximum value is 500

Dependent Care Assistance Credits (DCAC)

100		Taxpayer name as it appears on tax return	String64Type	Optional	Maximum length is 64 characters
110		Taxpayer ID – SSN	SSNType	Optional	Nine digit SSN
120		Taxpayer ID – FEIN	EINType	Optional	Nine digit FEIN
Part I – Partners in a Partnership or Shareholders in an S-Corporation					
130		Pass-through credit entity name	String50Type	Optional	Maximum length is 50 characters
140		Pass-through credit entity FEIN	EINType	Optional	Nine digit FEIN
		Percent Ownership	RatioType	Optional	6 total digits, 5 fractional digits
150		Portion of DCAC	USAmountNNType	Optional	Can contain up to 15 non-negative digits
Part II – Day Care Facilities Credit					

Ref #	Line #	Description	Type	Optional/Required	Rule
160	1	Total credit allocated over 10 tax years	USAmountType	Optional	Can contain up to 15 digits
170	2	Multiply Line 1 by .10 – annual allocated amt	USAmountType	Optional	Can contain up to 15 digits
180	3	Amount to be carried forward from prior years	USAmountType	Optional	Can contain up to 15 digits
190	4	Day care facilities credit for current year	USAmountType	Optional	Can contain up to 15 digits
200	5	Amount claimed in the current year	USAmountType	Optional	Can contain up to 15 digits
210	6	Amount to be carried forward to next year	USAmountType	Optional	Can contain up to 15 digits
220	6	Provider number of person operating facility	String20Type	Optional	Maximum length is 20 characters
Part III – Dependent Care Assistance Credit					
230	1	Amount of assistance furnished to employees	USAmountType	Optional	Can contain up to 15 digits
240	2	Total number of employees	IntergerPosType	Optional	Must be a positive number
250	3	Assistance divided by employees	USAmountType	Optional	Can contain up to 15 digits Maximum value is 6300
260	4	Multiply Line 3 by.25	USAmountType	Optional	Can contain up to 15 digits Maximum value is 1575
270	5	Dependent Care Assistance Credit	USAmountType	Optional	Can contain up to 15 digits
Part IV – Dependent Care Information and Referral Services Credit					
280	1	Amount paid providing info & referral services	USAmountType	Optional	Can contain up to 15 digits
290	2	Dependent care referral credit	USAmountType	Optional	Can contain up to 15 digits
Part V – Combined Credits					
300		Combined dependent care assistance credit	USAmountType	Optional	Can contain up to 15 digits

Film Production Credit (FPC)

100		Taxpayer name as it appears on tax return	String64Type	Optional	Maximum length is 64 characters
110		Taxpayer ID – SSN	SSNType	Optional	Nine digit SSN
120		Taxpayer ID – FEIN	EINType	Optional	Nine digit FEIN
130		Pass-through credit entity name	String50Type	Optional	Maximum length is 50 characters
140		Pass-through credit entity FEIN	EINType	Optional	Nine digit FEIN
150		Pass-through credit entity percentage of owned	RatioType	Optional	6 total digits, 5 fractional digits
160		Film certificate number	StringType	Optional	Maximum length is 15 characters
Employment Production Credit					
170	1	Employment production credit	USAmountType	Optional	Can contain up to 15 digits
180		Election choice – Carryover Credit	BooleanType	Optional	Either TRUE or FALSE required
190		Election choice – Refundable Credit	BooleanType	Optional	Either TRUE or FALSE required

Ref #	Line #	Description	Type	Optional/Required	Rule
Qualified Expenditures Credit					
200	2	Qualified expenditures credit	USAmountType	Optional	Can contain up to 15 digits
210	2	Qualified Certification Name	IndividualNameType	Optional	
220	2	Date of Certification Statement	DateType	Optional	Format YYYY-MM-DD
230	2	Name of title of corporate officer	String50Type	Optional	Maximum length is 50 characters
Total Film Production Credit					
240	3	Total film production credit	USAmountType	Optional	Can contain up to 15 digits

Film Production Credit, Schedule I – Employment Production Credit

100		Taxpayer ID – SSN	SSNType	Optional	Nine digit SSN
110		Taxpayer ID – FEIN	EINType	Optional	Nine digit FEIN
120	1	Total amount paid to Montana residents	USAmountType	Optional	Can contain up to 15 digits
Montana Residents who are participating cast members (Unbounded)					
130	2a	Name of cast member	String20Type	Optional	Maximum length is 20 characters
140	2b	SSN of cast member	SSNType	Optional	Nine digit SSN
150	2c	Declaration of Residency on file	BooleanType	Optional	Either TRUE or FALSE required
160	2d	Total amount paid to cast member	USAmountType	Optional	Can contain up to 15 digits
170	2e	Enter first $50,000 of compensation	USAmountType	Optional	Can contain up to 15 digits
				Optional	Maximum value is 50000
180	18	Total of all cast members credit	USAmountType	Optional	Can contain up to 15 digits
190	19	Employment production credit	USAmountType	Optional	Can contain up to 15 digits

Film Production Credit, Schedule II – Qualified Expenditures Credit

100		Taxpayer ID – SSN	SSNType	Optional	Nine digit SSN
110		Taxpayer ID – FEIN	EINType	Optional	Nine digit FEIN
120	1	Total expenditures at end of principal photo	USAmountType	Optional	Can contain up to 15 digits
Qualified expenditures detail information (Unbounded)					
130	2a	Name of Business or Individual	String50Type	Optional	Maximum length is 50 characters
140	2b	Description of qualified expenditure	ShortDescriptionType	Optional	Maximum length is 20 characters
150	2c	Date of qualified expenditures	DateType	Optional	Format YYYY-MM-DD
160	2d	Total amount of qualified expenditure	USAmountType	Optional	Can contain up to 15 digits

Ref #	Line #	Description	Type	Optional/Required	Rule
170	22	Total of all qualified expenditures	USAmountType	Optional	Can contain up to 15 digits
180	23	Qualified expenditures credit	USAmountType	Optional	an contain up to 15 digits

Health Insurance for Uninsured Montanans Credit (Form HI)

100		Taxpayer name as it appears on tax return	String64Type	Optional	Maximum length is 64 characters
110		Taxpayer ID – SSN	SSNType	Optional	Nine digit SSN
120		Taxpayer ID – FEIN	EINType	Optional	Nine digit FEIN
Part I – Pass-through entity information					
130		Pass-through credit entity name	StringType	Optional	
140		Pass-through credit entity FEIN	EINType	Optional	Nine digit FEIN
150		Share of health insurance for uninsured MT	**RatioType**	Optional	**6 total digits, 5 fractional digits**
Part II – Qualifications					
160	1	Been in business for at least 12 months	BooleanType	Optional	Either TRUE or FALSE required
170	2	Employ between 2 to 20 at least 20 hrs a week	BooleanType	Optional	Either TRUE or FALSE required
180	3	Pay at least 50% of insurance premium	BooleanType	Optional	Either TRUE or FALSE required
190	4	36 months or less since first claimed credit	BooleanType	Optional	Either TRUE or FALSE required
Part III – Credit Computations (Limited to 10 employees)					
200		Employee	StringType	Optional	Maximum length is 35 characters
210	a	Employee's monthly premium	USAmountType	Optional	Can contain up to 15 digits
220	b	Percent of premium paid by employer	RatioType	Optional	6 total digits, 5 fractional digits
230	d	Multiply column B by column C	USAmountType	Optional	Can contain up to 15 digits
240	e	Number of months each employee is insured	IntegerType	Optional	Enter as a positive value
250	f	Multiply column A by column E	USAmountType	Optional	Can contain up to 15 digits
260	g	Multiply column D by column E	USAmountType	Optional	Can contain up to 15 digits
270		Total column F	USAmountType	Optional	Can contain up to 15 digits
280		Total Column G	USAmountType	Optional	Can contain up to 15 digits
290	1	Multiply column F by .50	USAmountType	Optional	Can contain up to 15 digits
300	2	Total of column G	USAmountType	Optional	Can contain up to 15 digits
310	3	Health ins for uninsured Montanans credit	USAmountType	Optional	Can contain up to 15 digits

Oilseed Crushing & Biodiesel/Biolubricant Production Facilities Credit (Form OSC)

Ref #	Line #	Description	Type	Optional/Required	Rule
100		Taxpayer name as it appears on tax return	String64Type	Optional	Maximum length is 64 characters
110		Taxpayer ID – SSN	SSNType	Optional	Nine digit SSN
120		Taxpayer ID – FEIN	EINType	Optional	Nine digit FEIN
Part I – Partners in a Partnership or Shareholder in a S-Corporation					
130		Pass-through credit entity name	String50Type	Optional	Maximum length is 50 characters
140		Pass-through credit entity FEIN	EINType	Optional	Nine digit FEIN
150		Portion of OSC	USAmountType	Optional	an contain up to 15 digits
Part II – Oilseed Crushing Facility Credit					
160		Date crushing oilseed began	DateType	Optional	Format YYYY-MM-DD
170	1	Is equipment located in Montana	BooleanType	Optional	Either TRUE or FALSE required
180	2	Manufacture products from oilseed during year	BooleanType	Optional	Either TRUE or FALSE required
Property Purchased that Qualifies for Credit (Limited to 3 properties)					
190	3	Date Purchased	DateType	Optional	Format YYYY-MM-DD
200	3	Description of Property	StringType	Optional	Maximum length is 60 characters
210	3	Cost of Property	USAmountType	Optional	Can contain up to 15 digits
220	4	Total of Lines 3a through 3c	USAmountType	Optional	Can contain up to 15 digits
230	5	Oilseed crushing facility credit	USAmountType	Optional	Can contain up to 15 digits Maximum value is 500000
Part III – Biodiesel/Biolubricant Production facility Credit					
240		Date started biodiesel/biolubricant production	DateType	Optional	Format YYYY-MM-DD
250	6	Cost of constructing facility in Montana	USAmountType	Optional	Can contain up to 15 digits
260	7	Cost of equipment to operate in Montana	USAmountType	Optional	Can contain up to 15 digits
270	8	Total costs	USAmountType	Optional	Can contain up to 15 digits
280	9	Biodiesel/Biolubricant Prod Facilities Credit	USAmountType	Optional	Can contain up to 15 digits
Part IV - Combined Oilseed Crushing and biodiesel/Biolubricant Facilities Credit					
290	10	Amount of credit being carried forward	USAmountType	Optional	Can contain up to 15 digits
300	11	Combined credit	USAmountType	Optional	Can contain up to 15 digits

Recycle Credit/Deduction (Form RCYL)

100		Taxpayer name as it appears on tax return	String50Type	Optional	Maximum length is 50 characters
110		Taxpayer ID – SSN	SSNType	Optional	Nine digit SSN
120		Taxpayer ID – FEIN	EINType	Optional	Nine digit FEIN

Ref #	Line #	Description	Type	Optional/Required	Rule
130		Pass-through credit entity name	String50Type	Optional	Maximum length is 50 characters
140		Pass-through credit entity FEIN	EINType	Optional	Nine digit FEIN
150		Pass-through credit entity percentage of owned	**USAmountType**	Optional	**Can contain up to 15 digits**
Part I – Qualifications					
160	1	Was equipment purchased this year	BooleanType	Required	Either TRUE or FALSE required
170	2	Was equipment located/operating in MT	BooleanType	Required	Either TRUE or FALSE required
180	3	Is equipment used to produce energy	BooleanType	Required	Either TRUE or FALSE required
190	4 A	Is equipment used to collect reclaimed material	BooleanType	Required	Either TRUE or FALSE required
200	4 B	Is equipment used to make finished products	BooleanType	Required	Either TRUE or FALSE required
210	4 C	Is equipment used to treat soils	BooleanType	Required	Either TRUE or FALSE required
Part II – For equipment used in Montana					
220	1	Description and use of equipment	String255Type	Optional	Maximum length is 255 characters
230	2	Equipments date of purpose	DateType	Optional	Format YYYY-MM-DD
240	3	Cost of equipment	USAmountType	Optional	Can contain up to 15 digits Maximum value is 1000000
250	4	Computation of credit first $250,000	USAmountType	Optional	Can contain up to 15 digits Maximum value is 62500
260	4	Computation of credit next $250,000	USAmountType	Optional	Can contain up to 15 digits Maximum value is 37500
270	4	Computation of credit next $500,000	USAmountType	Optional	Can contain up to 15 digits Maximum value is 25000
280	4	Computation of credit Total Credit	USAmountType	Optional	Can contain up to 15 digits
Part III – For qualified specialized mobile equipment used in and out of Montana					
290	1	Description and use of equipment	String255Type	Optional	Maximum length is 255 characters
300	2	Equipment date of purpose	DateType	Optional	Format YYYY-MM-DD
310	3	Cost of equipment	USAmountType	Optional	Can contain up to 15 digits Maximum value is 1000000
320	4	Number of days used in Montana	IntegerType	Optional	Enter as a positive value
330	5	Total days used for the year	IntegerType	Optional	Enter as a positive value
340	6	Divide Line 4by amount on Line 5	RatioType	Optional	6 total digits, 5 fractional digits
350	7	Computation of credit first $250,000	USAmountType	Optional	Can contain up to 15 digits Maximum value is 62500
360	7	Computation of credit next $250,000	USAmountType	Optional	Can contain up to 15 digits Maximum value is 37500
370	7	Computation of credit next $500,000	USAmountType	Optional	Can contain up to 15 digits Maximum value is 25000

Ref #	Line #	Description	Type	Optional/Required	Rule
380	7	Computation of credit Total Credit	USAmountType	Optional	Can contain up to 15 digits
390	8	Total credit available	USAmountType	Optional	Can contain up to 15 digits
Part IV – Deduction for purchase of recycled material					
400	1	Type of recycled material purchased	String255Type	Optional	Maximum length is 255 characters
410	2	Cost of recycled material	USAmountType	Optional	Can contain up to 15 digits
420	3	Additional deduction – Multiply cost by .10	USAmountType	Optional	Can contain up to 15 digits

Temporary Emergency Lodging Credit (Form TELC)

100		Taxpayer name as it appears on tax return	String64Type	Optional	Maximum length is 64 characters
110		Taxpayer ID – SSN	SSNType	Optional	Nine digit SSN
120		Taxpayer ID – FEIN	EINType	Optional	Nine digit FEIN
130		Public accommodation license number	String10Type	Optional	Maximum length is 10 characters
140		Pass-through credit entity name	String50Type	Optional	Maximum length is 50 characters
150		Pass-through credit entity FEIN	EINType	Optional	Nine digit FEIN
160		Portion of TELC	USAmountType	Optional	Can contain up to 15 digits
Table for each Individual Referred for Lodging in Montana (Unbounded)					
170	1 A	Name or organization referring individuals	StringType	Optional	Maximum length is 35 characters
180	1 B	Dates of lodging	DateType	Optional	Format YYYY-MM-DD
190	1 C	Number of rooms provided	USAmountPosType	Optional	Can contain up to 15 digits
200	1 D	Number of nights of lodging	IntegerType	Optional	Maximum length is 5 characters
210	1 F	Multiply Columns C, D and E	USAmountPosType	Optional	Can contain up to 15 positive digits
220	11	Amount of credit	USAmountType	Optional	Can contain up to 15 digits

Application and Affidavit for Certification and Approval of Mineral and Coal Exploration Incentive Credits (Form MINE-CERT)

100	Application year ending	YearType	Required	Must be a 4 digit year
110	Name of applicant	String50Type	Required	Maximum length is 50 characters
120	Address of applicant	StringType	Optional	Maximum length is 60 characters
130	Project name	String50Type	Optional	Maximum length is 50 characters
140	Project area	String50Type	Optional	Maximum length is 50 characters

Ref #	Line #	Description	Type	Optional/Required	Rule
Part I – Eligible Costs					
150		Total amount of exploration incentive costs	USAmountNNType	Optional	Can contain up to 15 non negative digits
Part II – Property Information					
160		Location of deposit	String255Type	Optional	Maximum length is 255 characters
170		Claim names/serial numbers for the property	String255Type	Optional	Maximum length is 255 characters
180		Date mineral rights were acquired	String255Type	Optional	Maximum length is 255 characters
Part III – Prospect/Mineral Information					
190	1	Has mining ever occurred – Yes	BooleanType	Optional	Either TRUE or FALSE required
200	1	Has mining ever occurred – No	BooleanType	Optional	Either TRUE or FALSE required
210	1	Has mining ever occurred – Unknown	BooleanType	Optional	Either TRUE or FALSE required
220	1	Dates activities commenced	String255Type	Optional	Maximum length is 255 characters
230	2	Describe existing improvements	String255Type	Optional	Maximum length is 255 characters
240	3	Date previous mine was shut down	String255Type	Optional	Maximum length is 255 characters
250	4	Has Affidavit of Initial Prod been filed – Yes	BooleanType	Optional	Either TRUE or FALSE required
260	4	Has Affidavit of Initial Prod been filed – No	BooleanType	Optional	Either TRUE or FALSE required
270	4	Has Affidavit of Initial Prod been filed – Unknown	BooleanType	Optional	Either TRUE or FALSE required
280	5	Date of initial production	DateType	Optional	Format YYYY-MM-DD
290	6	Final date mineral rights were acquired	DateType	Optional	Format YYYY-MM-DD
300	6	Land is vacant/unappropriated state/fed land	BooleanType	Optional	Either TRUE or FALSE required
310	6	Land is claimed, leased or patented by applicant	BooleanType	Optional	Either TRUE or FALSE required
320	6	Land claimed, leased, patented or private	BooleanType	Optional	Either TRUE or FALSE required
330	7 A	All permits necessary to start construction	BooleanType	Optional	Either TRUE or FALSE required
List of all permits (Unbounded)					
340	7 B	Permit Number	String20Type	Optional	Maximum length is 20 characters
350	7 B	Issuing agency name	String50Type	Optional	Maximum length is 50 characters
360	7 B	Type of permit	String20Type	Optional	Maximum length is 20 characters
370	7 B	Date of permit	DateType	Optional	Format YYYY-MM-DD
380	7 B	Status of permit	String20Type	Optional	Maximum length is 20 characters
390	8	Description of minerals you are seeking	String50Type	Optional	Maximum length is 50 characters
Part IV – Breakdown of Exploration Costs Incurred to Bring the Mine into Production					
400	1	Personnel costs	USAmountNNType	Optional	Can contain up to 15 non negative digits
410	2	Transportation costs	USAmountNNType	Optional	Can contain up to 15 non negative digits
420	3	Fuel costs	USAmountNNType	Optional	Can contain up to 15 non negative digits
430	4	Field costs	USAmountNNType	Optional	Can contain up to 15 non negative digits
440	5	Communications costs	USAmountNNType	Optional	Can contain up to 15 non negative digits
450	6	Geochemical and geophysical costs	USAmountNNType	Optional	Can contain up to 15 non negative digits

Ref #	Line #	Description	Type	Optional/Required	Rule
460	7	Contractual costs	USAmountNNType	Optional	Can contain up to 15 non negative digits
470	8	Misc/general business operating costs	USAmountNNType	Optional	Can contain up to 15 non negative digits
480	9	Total exploration incentive credit costs	USAmountNNType	Optional	Can contain up to 15 non negative digits
Part V – Exploration Activity Data List (Unbounded)					
490		Summary of work completed during year (unbounded)	String255Type	Optional	Maximum length is 255 characters
Part VI – Personnel Information					
500	A	Number of employees	IntegerNNType	Optional	Must be a positive number
510	B	List the name of consultants (Limit of 5)	StringType	Optional	Maximum length is 60 characters
Part VII – Identification of Business Type					
520		Entity Type – PTR qualified in state	BooleanType	Optional	Either TRUE or FALSE required
530		Entity Type – Corp qualified in state	BooleanType	Optional	Either TRUE or FALSE required
540		Entity Type – LLC qualified in state	BooleanType	Optional	Either TRUE or FALSE required
550		Entity Type – Sole Proprietorship	BooleanType	Optional	Either TRUE or FALSE required
560		Entity Type – Other	BooleanType	Optional	Either TRUE or FALSE required
570		Explanation of other	StringType	Optional	Maximum length is 60 characters
Part VIII – Applicant Signature					
580		Applicants name	StringType	Optional	Maximum length is 60 characters
590		Applicants signature	String50Type	Optional	Maximum length is 50 characters
600		Subscribed and sworn date	DateType	Optional	Format YYYY-MM-DD
610		Signature of Notary	String50Type	Optional	Maximum length is 50 characters
620		Commission expires date	DateType	Optional	Format YYYY-MM-DD

Montana Schedule K-1 (Unbounded)

100	Tax year beginning	DateType	Optional	Format YYYY-MM-DD
110	Tax year ending	DateType	Optional	Format YYYY-MM-DD
Part I – Pass-Through Entity Information				
120	Form CLT-4S checkbox	BooleanType	Optional	Either TRUE or FALSE required
130	Form PR-1 checkbox	BooleanType	Optional	Either TRUE or FALSE required
140	Amended Schedule K-1 checkbox	BooleanType	Optional	Either TRUE or FALSE required
150	Final Schedule K-1 checkbox	BooleanType	Optional	Either TRUE or FALSE required
160	Entity's name	StringType	Optional	
170	Entity's FEIN	EINType	Optional	Nine digit FEIN
180	US Address – Address Line 1	StreetAddressType	Required	AN, Maximum length is 35 characters
190	US Address – Address Line 2	StreetAddressType	Optional	AN, Maximum length is 35 characters

Ref #	Line #	Description	Type	Optional/Required	Rule
200		US Address – City	CityType	Required	AN, Maximum length is 22 characters
210		US Address – State	StateType	Required	Enumerations list, Max length is 2 characters
220		US Address – ZIP Code	ZIPCodeType	Required	Numeric
230		US Address – In care of name	String50Type	Optional	Maximum length is 50 characters
240		Foreign Address – Address Line 1	StreetAddressType	Required	AN, Maximum length is 35 characters
250		Foreign Address – Address Line 2	StreetAddressType	Optional	AN, Maximum length is 35 characters
260		Foreign Address – City	TextType	Optional	AN, Maximum length is 50 characters
270		Foreign Address – Province or State	TextType	Optional	AN, Maximum length is 50 characters
280		Foreign Address – Country	CountryType	Required	Enumerations list, Max length is 2 characters
290		Foreign Address – Postal Code	TextType	Optional	AN, Maximum length is 50 characters
300		Foreign Address – In care of name	String50Type	Optional	Maximum length is 50 characters
Part 2 – Partner Information					
310		Name	StringType		
320		Partners ID – FEIN	EINType	Optional	Nine digit FEIN
330		Partners ID – SSN	SSNType	Optional	Nine digit SSN
340		US Address – Address Line 1	StreetAddressType	Required	AN, Maximum length is 35 characters
350		US Address – Address Line 2	StreetAddressType	Optional	AN, Maximum length is 35 characters
360		US Address – City	CityType	Required	AN, Maximum length is 22 characters
370		US Address – State	StateType	Required	Enumerations list, Max length is 2 characters
380		US Address – ZIP Code	ZIPCodeType	Required	Numeric
390		US Address – In care of name	String50Type	Optional	Maximum length is 50 characters
400		Foreign Address – Address Line 1	StreetAddressType	Required	AN, Maximum length is 35 characters
410		Foreign Address – Address Line 2	StreetAddressType	Optional	AN, Maximum length is 35 characters
420		Foreign Address – City	TextType	Optional	AN, Maximum length is 50 characters
430		Foreign Address – Province or State	TextType	Optional	AN, Maximum length is 50 characters
450		Foreign Address – Country	CountryType	Required	Enumerations list, Max length is 2 characters
460		Foreign Address – Postal Code	TextType	Optional	AN, Maximum length is 50 characters
470		Foreign Address – In care of name	String50Type	Optional	Maximum length is 50 characters
480		Resident checkbox	BooleanType	Optional	Either TRUE or FALSE required
490		Nonresident checkbox	BooleanType	Optional	Either TRUE or FALSE required
Part 3 – All Partners Distributive Share of Montana Additions and Deductions					
	Montana additions to income				
500	A1	Federal tax-exempt interest and dividends	USAmountType	Optional	Can contain up to 15 digits
510	A2	Taxes based on income or profits	USAmountType	Optional	Can contain up to 15 digits
520	A3	Other additions – List types	StringType	Optional	
530	A3	Other additions amount	USAmountType	Optional	Can contain up to 15 digits

Ref #	Line #	Description	Type	Optional/Required	Rule
	Montana deductions from income				
540	B1	Interest on US government obligations	USAmountType	Optional	Can contain up to 15 digits
550	B2	Deduction for purchasing recycled material	USAmountType	Optional	Can contain up to 15 digits
560	B3	Other deductions – List types	StringType		
570	B3	Other deductions amount	USAmountType	Optional	Can contain up to 15 digits
Part 4 – Nonresident Partner Only – Montana Distributive Share of Income (Loss) and Deductions					
580	1	Ordinary business income (loss)	USAmountType	Optional	Can contain up to 15 digits
590	2	Net rental real estate income (loss)	USAmountType	Optional	Can contain up to 15 digits
600	3	Other net rental income (loss)	USAmountType	Optional	Can contain up to 15 digits
610	4	Guaranteed payments	USAmountType	Optional	Can contain up to 15 digits
620	5	Interest income	USAmountType	Optional	Can contain up to 15 digits
630	6	Ordinary dividends	USAmountType	Optional	Can contain up to 15 digits
640	7	Royalties	USAmountType	Optional	Can contain up to 15 digits
650	8	Net short-term capital gain (loss)	USAmountType	Optional	Can contain up to 15 digits
660	9	Net long-term capital gain (loss)	USAmountType	Optional	Can contain up to 15 digits
670	10	Net section 1231 gain (loss)	USAmountType	Optional	Can contain up to 15 digits
680	11	Other income (loss) – List types	StringType	Optional	
690	11	Other income (loss) amount	USAmountType	Optional	Can contain up to 15 digits
700	12	Section 179 expense apportionable to MT	USAmountType	Optional	Can contain up to 15 digits
710	13	Other expense deductions apportionable to MT	USAmountType	Optional	Can contain up to 15 digits
Part 5 – Supplemental Information					
720	1	Composite income tax paid on behalf of partner	USAmountType	Optional	Can contain up to 15 digits
730	2	Income tax withheld on behalf of partner	USAmountType	Optional	Can contain up to 15 digits
740	3	Montana mineral royalty tax withheld	USAmountType	Optional	Can contain up to 15 digits
750	4	Separately stated allocable nonbusiness items	USAmountType	Optional	Can contain up to 15 digits
760	5	Other information – List types	StringType	Optional	
770	5	Other information amount	USAmountType	Optional	Can contain up to 15 digits
Part 6 – Tax Credits and Recapture					
780	1	Insure MT form HI business FEIN	EINType	Optional	Nine digit FEIN
790	1	Insure MT form HI amount	USAmountType	Optional	Can contain up to 15 digits
800	1a	Insure MT form HI premiums from Part 3	USAmountType	Optional	Can contain up to 15 digits
810	2	Multiply CGR accounts	BooleanType	Optional	Either TRUE or FALSE required
820	2	CGR Account ID	StringType	Optional	Maximum length is 13 characters 10 numeric follow by 3 alpha Alpha characters must be CGR Example: 4123456002CGR

Ref #	Line #	Description	Type	Optional/Required	Rule
830	2	Contractors gross receipts tax credit	USAmountType	Optional	Can contain up to 15 digits
840	3	Health ins for uninsured Montanans credit	USAmountType	Optional	Can contain up to 15 digits
850	4	Other credit/recapture information description	StringType	Optional	
860	4	Other credit/recapture information amount	USAmountType	Optional	Can contain up to 15 digits